제2017 - 78663 호

# 안 전 인 증 서

( 사업장명 ) 극동호이스트(주)

( 소 재 지 ) (154-23)경기도 안산시 단원구 해봉로 119(성곡동)

위 사업장에서 제조하는 아래의 품목이 산업안전보건법 제34조 및 같은 법 시행규칙 제58조의4제4항에 따른 안전인증 심사 결과 안전·보건기준에 적합하므로 안전인증표시의 사용을 인증합니다.

품 목

호이스트

형식,모델(용량,등급)/인증번호

KDC40/5-MA (40/5Ton) / 17-AE2AC-13399

인 증 기 준

고용노동부 고시 제2016 - 29호 ( 위험기계·기구 안전인증 고시 )

인 증 조 건

인증유효기간 : 해당없음

설치장소 : 옥외

2017년 07월 14일

한국산업안전보건공단이사장

# 심사결과 통지서

| | | | | |
|---|---|---|---|---|
| 신청인 | 사업장명 | 극동호이스트(주) | 사업장관리번호 | 134-81-013350 |
| | 사업자등록번호 | 134-81-01335 | 대표자 성명 | 최성찬 |
| | 소재지 | (154 - 23) 경기도 안산시 단원구 해봉로 119(성곡동) | | |

| | | | |
|---|---|---|---|
| 안전인증대상 기계·기구명 | 호이스트 | | |
| 형 식 (규 격) | KDC40/5-MA | 용 량 (등 급) | 40/5 Ton |

산업안전보건법 제 34조 및 같은 법 시행규칙 제58조의4에 따라 실시한

[ ] 예비심사

[ √ ] 서면심사

[ ] 기술능력 및 생산체계 심사

[ ] 개별 제품심사

[ ] 개별 제품심사(예작중)

[ ] 형식별 제품심사

결과가 [ √ ] 적 합 / [ ] 부적합 함을 통지합니다.

2017년 06월 23일

인증심사원 김영태 (서명 또는 인)

한국산업안전보건공단 중부지역본부장

불법복제 및 배포금지

# 서 면 심 사 서 류

## 형식 번호 : KDC40/5 -MA

## Double Rail Type Hoist

## 극 동 호 이 스 트 ㈜

工場 : 경기도 안산시 단원구 해봉로 119 (성곡동)

電話 : 031) 491 - 5311

FAS : 031) 494 - 5315

# 동 일 형 식 일 람 표

| 사업장명 | 극동호이스트㈜ | 개정일자 및 번호 | | 인증번호 | | |
|---|---|---|---|---|---|---|
| 형식 및 모델 | | 동일 형식 인정범위 및 내역 | | | | 비 고 |
| 형식 | 모델 | 권상속도(m/min) | 횡행속도(m/min) | 양정(m) | 횡행방식 | |
| KDC40/5-MA | KDC40/5-L12-MA | 고속:3.2M/MIN | 고속 : 15M/MIN | 12 | 모터구동식 | |
| | KDC40/5-L18-MA | CREEP:0.32M/MIN | | 18 | | |
| | KDC40/5-L24-MA | 5T : SINGLE TYPE | | 24 | | |
| | KDC40/5C-L12-MA | 고속:3.2M/MIN | 저속 : 10M/MIN | 12 | | |
| | KDC40/5C-L18-MA | CREEP:0.32M/MIN | | 18 | | |
| | KDC40/5C-L24-MA | 5T : CREEP TYPE | | 24 | | |

***AUX HOIST TABLE**

| HOISTING TYPE | *5톤 권상속도 |
|---|---|
| SINGLE TYPE | 고속:5.6M/MIN |
| | 저속:4.2M/MIN |
| CREEP TYPE | 고속:5.6M/MIN |
| | CREEP:0.56M/MIN |

형식번호 : KD5
인증번호 : 15-AQ2AC-00229
적용모델 : KD5-L12-S, KD5-L18-S, KD5-L24-S
KDC5-L12-S, KDC5-L18-S, KDC5-L24-S

불법복제 및 배포금지

불법복제 및 배포금지

# 방호장치의 성능검사 합격증 사본

불법복제 및 배포금지

제 2012-BJ-0009 호

# 안 전 인 증 서

정호엔지니어링

경기도 광명시 노동사동 440-5

위 사업장에서 제조하는 아래의 품목이 산업안전보건법 제34조 및 같은 법 시행규칙 제58조의4제4항에 따른 안전인증 심사 결과 안전 · 보건기준에 적합하므로 안전인증표시의 사용을 인증합니다.

**품 목**

양중기용 과부하방지장치

**형식 · 모델/용량 · 등급/인증번호**

| 형식·모델 | 용량·등급 | 인증번호 |
|---|---|---|
| JDL-100 | J-2 | 12-AV2BJ-0009 |

**인 증 기 준**

방호장치 의무안전인증 고시(고용노동부고시 제2010-36호)

**인 증 조 건**

아래 주소에서 생산되는 제품에 한함.

정호엔지니어링, 경기도 광명시 노동사동 440-5

2012년 06월 11일

**한국산업안전보건공단 이사장**

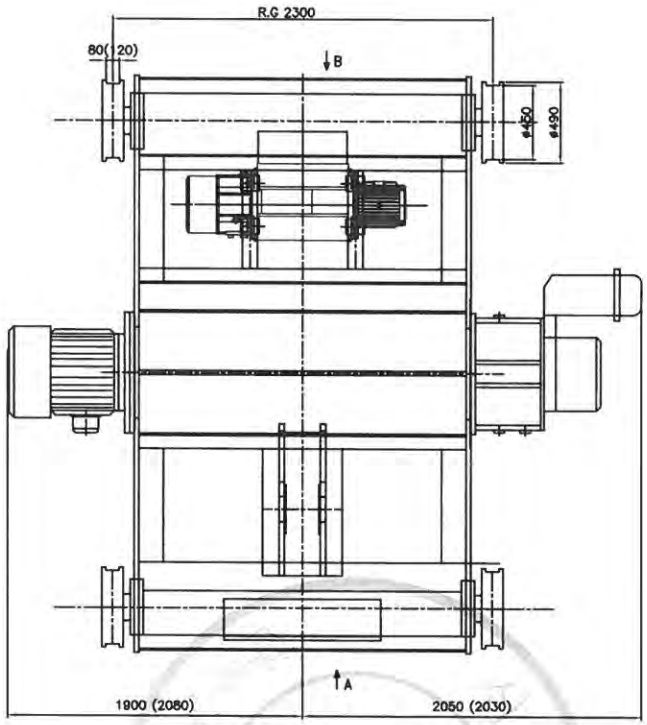


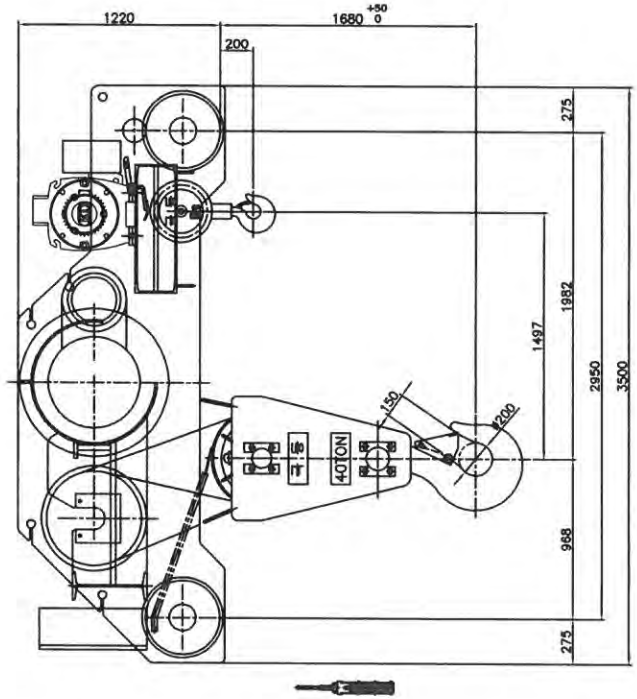


극동호이스트
정격하중
40000KG
VIEW A

극동호이스트
정격하중
5000KG
VIEW B

| SPECIFICATION | | | | | | | | |
|---|---|---|---|---|---|---|---|---|
| HOIST | | | MAIN | | | AUX | | |
| HOISTING LOAD | | | 40000 KG | | | 5000 KG | | |
| TEST LOAD | | | 50000 KG | | | 6250 KG | | |
| LIFT | | | 12 M | | | 12 M | | |
| HOISTING | | SPEED | 3.2/0.32 M/MIN | HIGH | 5.6 M/MIN | LOW | 4.2 M/MIN | |
| | | MOTOR | 33/3.7KWx6/4P | | 5.5 KW x 6P | | 4.2 KW x 8P | |
| TRAVERSING | HIGH | SPEED | 15 M/MIN | | | | | |
| | | MOTOR | 2.2KW x 4P (2UINIT) | | | | | |
| | LOW | SPEED | 10 M/MIN | | | | | |
| | | MOTOR | 1.5KW x 6P (2UINIT) | | | | | |
| WIRE ROPE | | | 6 x Fi(25) ø28x6 FALLS | | (6 x 37) ø16 x 2 FALLS | | | |
| POWER SOURCE | | | AC#3 220/380/440/460/480V 60Hz | | | | | |
| TRAVERSING RAIL | | | 30, 37, 50, 73 KG/M | | | | | |
| WEIGHT | | | 8900 KG | | | | | |

[NOTE]
( )안 치수는 T/S RAIL 73kg/m 용
* 주권, 보권 동시 사용 금지 *

| REV | DATE | DESCRIPTION | DRAWN | CHECK | APPRVD |
|---|---|---|---|---|---|
| A | 29.MAY.2017 | FOR CONSTRUCTION | M.H.KIM | | |

PROJECT

CLIENT

MANUFACTURER
KUKDONG HOIST CO., LTD.

TITLE
GENERAL ARRANGEMENT DRAWING
WIREHOIST_KDC40/5-L12-MA

| SCALE | DWG. NO. | SHT. NO. | REV. |
|---|---|---|---|
| - | KDC40/5L12MA | - | A |

A3 (420x297mm)

불법복제 및 배포금지

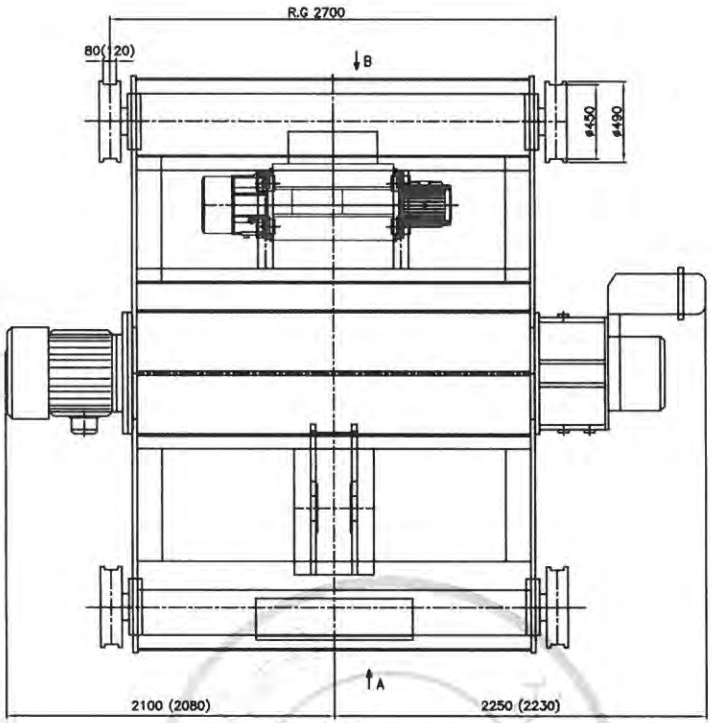


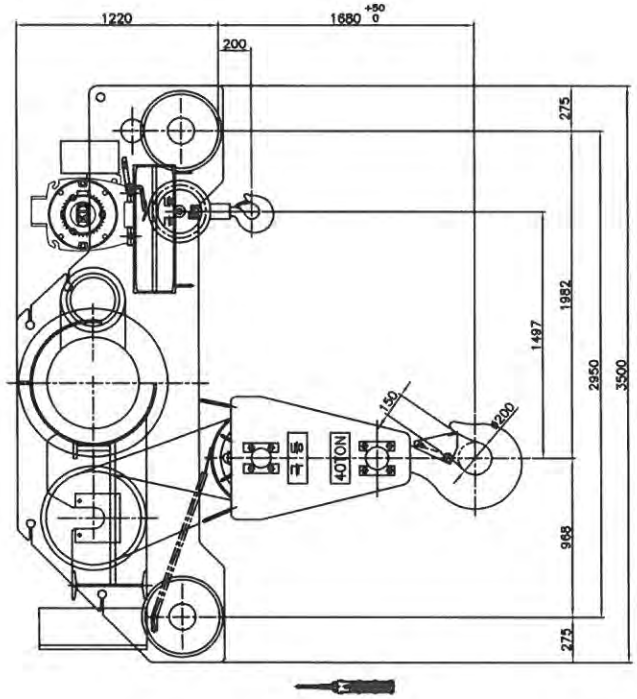


극동호이스트
정격하중
40000KG
VIEW A

극동호이스트
정격하중
5000KG
VIEW B

| SPECIFICATION | | | | | | | | |
|---|---|---|---|---|---|---|---|---|
| HOIST | | | MAIN | | | AUX | | |
| HOISTING LOAD | | | 40000 KG | | | 5000 KG | | |
| TEST LOAD | | | 50000 KG | | | 6250 KG | | |
| LIFT | | | 18 M | | | 18 M | | |
| HOISTING | | SPEED | 3.2/0.32 M/MIN | HIGH | 5.6 M/MIN | LOW | 4.2 M/MIN | |
| | | MOTOR | 33/3.7KWx6/4P | | 5.5 KW x 6P | | 4.2 KW x 8P | |
| TRAVERSING | HIGH | SPEED | 15 M/MIN | | | | | |
| | | MOTOR | 2.2KW x 4P (2UINIT) | | | | | |
| | LOW | SPEED | 10 M/MIN | | | | | |
| | | MOTOR | 1.5KW x 6P (2UINIT) | | | | | |
| WIRE ROPE | | | 6 x Fi(25) ø28x6 FALLS | | | (6 x 37) ø16 x 2 FALLS | | |
| POWER SOURCE | | | AC#3 220/380/440/460/480V 60Hz | | | | | |
| TRAVERSING RAIL | | | 30, 37, 50, 73 KG/M | | | | | |
| WEIGHT | | | 10000 KG | | | | | |

[NOTE]
( )안 치수는 T/S RAIL 73kg/m 용
* 주권, 보관 등시 사용 금지 *

| REV | DATE | DESCRIPTION | DRAWN | CHECK | APPRVD |
|---|---|---|---|---|---|
| A | 29.MAY.2017 | FOR CONSTRUCTION | M.H.KIM | | |

PROJECT

CLIENT

MANUFACTURER
KUKDONG HOIST CO., LTD.

TITLE
GENERAL ARRANGEMENT DRAWING
WIREHOIST_KDC40/5-L18-MA

| SCALE | DWG. NO. | SHT. NO. | REV. |
|---|---|---|---|
| - | KDC40/5L18MA | - | A |

A3 (420x297mm)

출판물지 및 배포금지

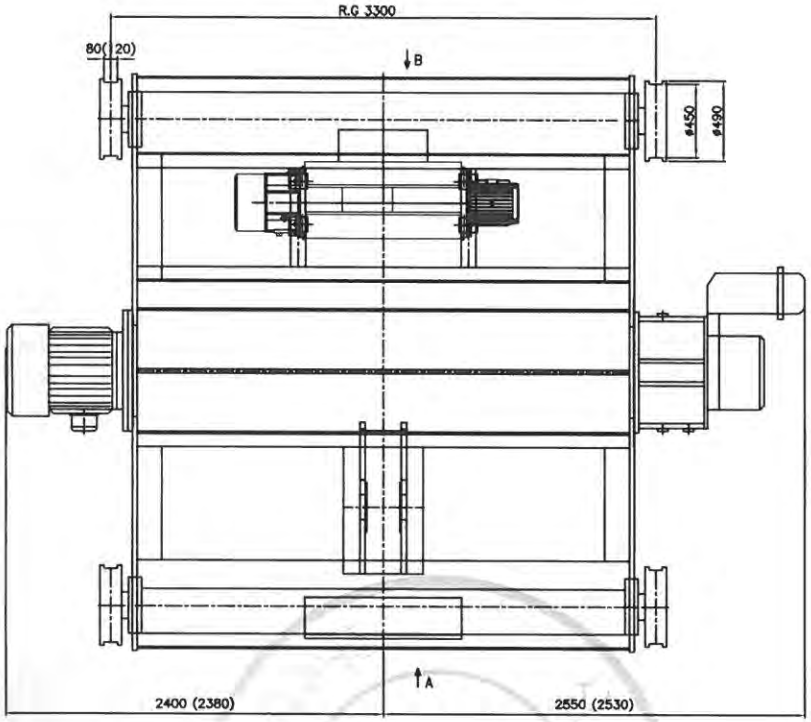


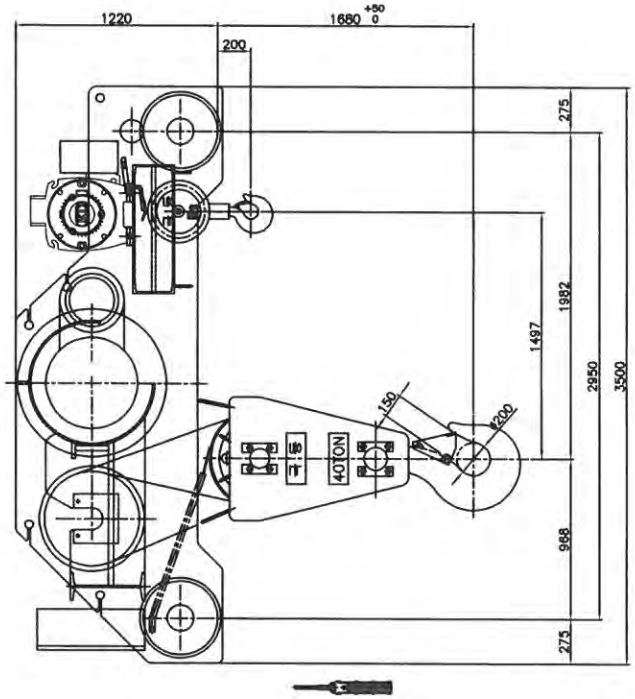


극동호이스트
정격하중
40000KG
VIEW A

극동호이스트
정격하중
5000KG
VIEW B

| SPECIFICATION | | | | | | | | |
|---|---|---|---|---|---|---|---|---|
| HOIST | | | MAIN | | | AUX | | |
| HOISTING LOAD | | | 40000 KG | | | 5000 KG | | |
| TEST LOAD | | | 50000 KG | | | 6250 KG | | |
| LIFT | | | 24 M | | | 24 M | | |
| HOISTING | | SPEED | 3.2/0.32 M/MIN | HIGH | 5.6 M/MIN | LOW | 4.2 M/MIN | |
| | | MOTOR | 33/3.7KWx6/4P | | 5.5 KW x 6P | | 4.2 KW x 8P | |
| TRAVERSING | HIGH | SPEED | 15 M/MIN | | | | | |
| | | MOTOR | 2.2KW x 4P (2UINIT) | | | | | |
| | LOW | SPEED | 10 M/MIN | | | | | |
| | | MOTOR | 1.5KW x 6P (2UINIT) | | | | | |
| WIRE ROPE | | | 6 x Fi(25) φ28x6 FALLS | | | (6 x 37) φ16 x 2 FALLS | | |
| POWER SOURCE | | | AC#3 220/380/440/460/480V 60Hz | | | | | |
| TRAVERSING RAIL | | | 30, 37, 50, 73 KG/M | | | | | |
| WEIGHT | | | 11600 KG | | | | | |

[NOTE]
( )안 치수는 T/S RAIL 73kg/m 용
* 주권, 보권 동시 사용 금지 *

| REV | DATE | DESCRIPTION | DRAWN | CHECK | APPRVD |
|---|---|---|---|---|---|
| A | 29.MAY.2017 | FOR CONSTRUCTION | M.H.KIM | | |

PROJECT

CLIENT

MANUFACTURER KUKDONG HOIST CO., LTD.

TITLE GENERAL ARRANGEMENT DRAWING
WIREHOIST_KDC40/5-L24-MA

| SCALE | DWG. NO. | SHT. NO. | REV. |
|---|---|---|---|
| - | KDC40/5L24MA | - | A |

A3 (420x297mm)

불법복제 및 배포금지

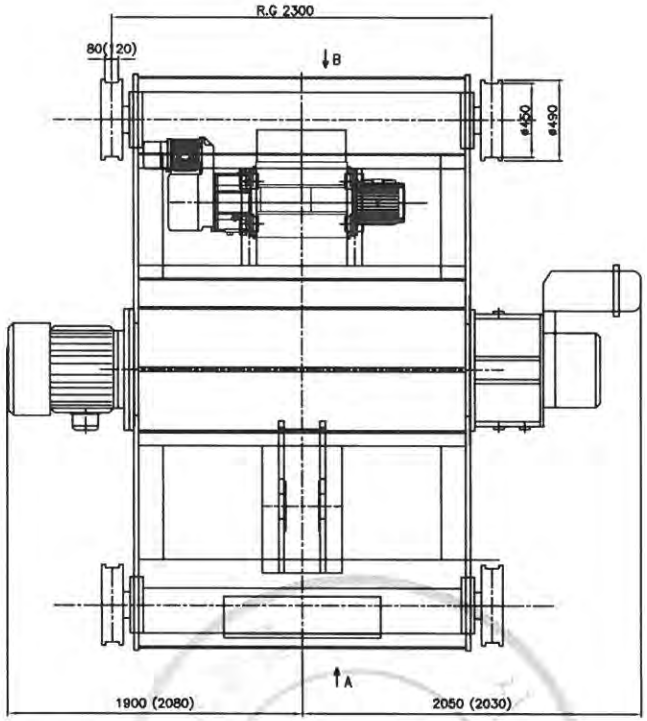


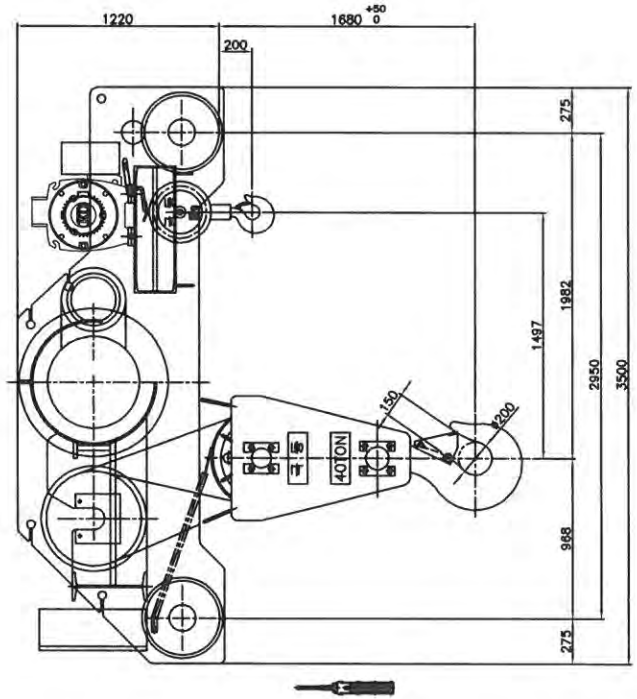


극동호이스트
정격하중
40000KG
VIEW A

극동호이스트
정격하중
5000KG
VIEW B

| SPECIFICATION | | | | |
|---|---|---|---|---|
| HOIST | | | MAIN | AUX |
| HOISTING LOAD | | | 40000 KG | 5000 KG |
| TEST LOAD | | | 50000 KG | 6250 KG |
| LIFT | | | 12 M | 12 M |
| HOISTING | | SPEED | 3.2/0.32 M/MIN | 5.6/0.56 M/MIN |
| | | MOTOR | 33/3.7KWx6/4P | 5.5/1.0 KW x 6P |
| TRAVERSING | HIGH | SPEED | 15 M/MIN | |
| | | MOTOR | 2.2KW x 4P (2UINIT) | |
| | LOW | SPEED | 10 M/MIN | |
| | | MOTOR | 1.5KW x 6P (2UINIT) | |
| WIRE ROPE | | | 6 x Fi(25) ø28x6 FALLS | (6 x 37) ø16 x 2 FALLS |
| POWER SOURCE | | | AC#3 220/380/440/460/480V 60Hz | |
| TRAVERSING RAIL | | | 30, 37, 50, 73 KG/M | |
| WEIGHT | | | 8900 KG | |

[NOTE]
( )안 치수는 T/S RAIL 73kg/m 용
* 주권, 보권 동시 사용 금지 *

| REV | DATE | DESCRIPTION | DRAWN | CHECK | APPRVD |
|---|---|---|---|---|---|
| A | 29.MAY.2017 | FOR CONSTRUCTION | M.H.KIM | | |

PROJECT

CLIENT

MANUFACTURER
KUKDONG HOIST CO., LTD.

TITLE
GENERAL ARRANGEMENT DRAWING
WIREHOIST_KDC40/5C-L12-MA

| SCALE | DWG. NO. | SHT. NO. | REV. |
|---|---|---|---|
| - | KDC40/5CL12MA | - | A |

A3 (420x297mm)

무단배포 및 재배포 금지

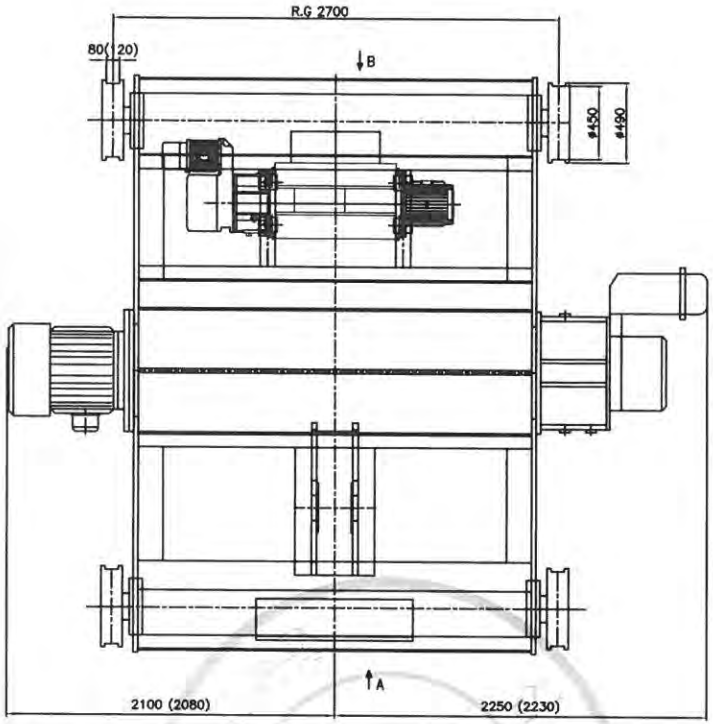


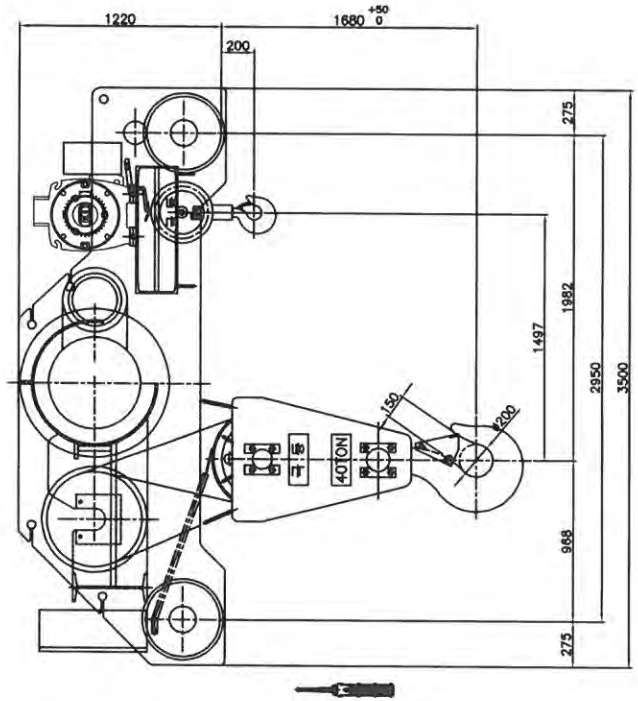


극동호이스트
정격하중
40000KG
VIEW A

극동호이스트
정격하중
5000KG
VIEW B

| SPECIFICATION | | | | |
|---|---|---|---|---|
| HOIST | | | MAIN | AUX |
| HOISTING LOAD | | | 40000 KG | 5000 KG |
| TEST LOAD | | | 50000 KG | 6250 KG |
| LIFT | | | 18 M | 18 M |
| HOISTING | | SPEED | 3.2/0.32 M/MIN | 5.6/0.56 M/MIN |
| | | MOTOR | 33/3.7KWx6/4P | 5.5/1.0 KW x 6P |
| TRAVERSING | HIGH | SPEED | 15 M/MIN | |
| | | MOTOR | 2.2KW x 4P (2UINIT) | |
| | LOW | SPEED | 10 M/MIN | |
| | | MOTOR | 1.5KW x 6P (2UINIT) | |
| WIRE ROPE | | | 6 x Fi(25) ø28x6 FALLS | (6 x 37) ø16 x 2 FALLS |
| POWER SOURCE | | | AC#3 220/380/440/460/480V 60Hz | |
| TRAVERSING RAIL | | | 30, 37, 50, 73 KG/M | |
| WEIGHT | | | 10000 KG | |

[NOTE]
( )안 치수는 T/S RAIL 73kg/m 용
* 주권, 보권 동시 사용 금지 *

| REV | DATE | DESCRIPTION | DRAWN | CHECK | APPRVD |
|---|---|---|---|---|---|
| A | 29.MAY.2017 | FOR CONSTRUCTION | M.H.KIM | | |

PROJECT

CLIENT

MANUFACTURER: KUKDONG HOIST CO., LTD.

TITLE: GENERAL ARRANGEMENT DRAWING
WIREHOIST_KDC40/5C-L18-MA

| SCALE | DWG. NO. | SHT. NO. | REV. |
|---|---|---|---|
| - | KDC40/5CL18MA | - | A |

A3 (420x297mm)

무단배포 및 복제금지

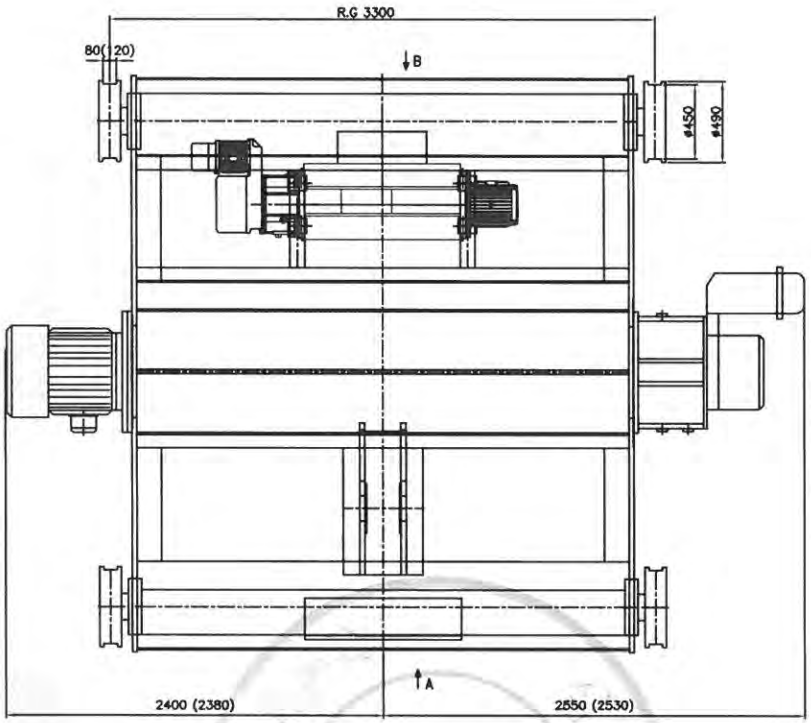


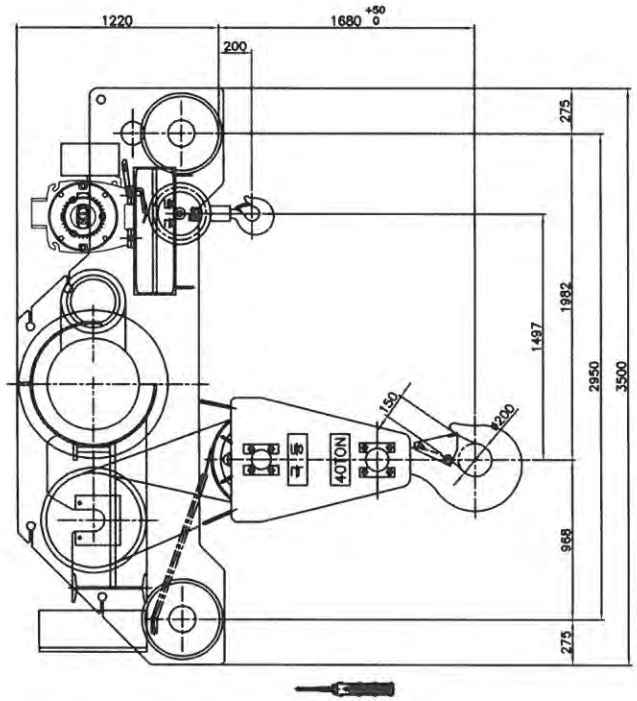


극동호이스트
정격하중
40000KG
VIEW A

극동호이스트
정격하중
5000KG
VIEW B

| SPECIFICATION | | | | |
|---|---|---|---|---|
| HOIST | | MAIN | | AUX |
| HOISTING LOAD | | 40000 KG | | 5000 KG |
| TEST LOAD | | 50000 KG | | 6250 KG |
| LIFT | | 24 M | | 24 M |
| HOISTING | SPEED | 3.2/0.32 M/MIN | | 5.6/0.56 M/MIN |
| | MOTOR | 33/3.7KWx6/4P | | 5.5/1.0 KW x 6P |
| TRAVERSING HIGH | SPEED | 15 M/MIN | | |
| | MOTOR | 2.2KW x 4P (2UINIT) | | |
| TRAVERSING LOW | SPEED | 10 M/MIN | | |
| | MOTOR | 1.5KW x 6P (2UINIT) | | |
| WIRE ROPE | | 6 x Fi(25) φ28x6 FALLS | | (6 x 37) φ16 x 2 FALLS |
| POWER SOURCE | | AC#3 220/380/440/460/480V 60Hz | | |
| TRAVERSING RAIL | | 30, 37, 50, 73 KG/M | | |
| WEIGHT | | 11600 KG | | |

[NOTE]
( )안 치수는 T/S RAIL 73kg/m 용
* 주권, 보관 동시 사용 금지 *

| REV | DATE | DESCRIPTION | DRAWN | CHECK | APPRVD |
|---|---|---|---|---|---|
| A | 29.MAY.2017 | FOR CONSTRUCTION | M.H.KIM | | |

PROJECT

CLIENT

MANUFACTURER: KUKDONG HOIST CO., LTD.

TITLE: GENERAL ARRANGEMENT DRAWING
WIREHOIST_KDC40/5C-L24-MA

| SCALE | DWG. NO. | SHT. NO. | REV. |
|---|---|---|---|
| - | KDC40/5CL24MA | - | A |

A3 (420x297mm)

불법복제 및 배포금지

ADR'S NO.

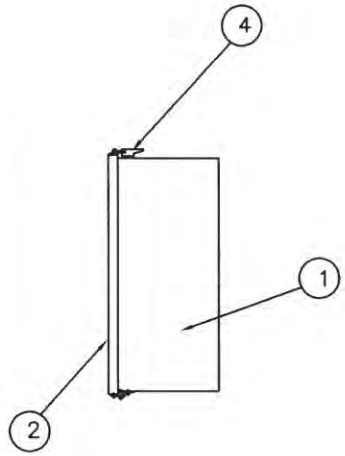


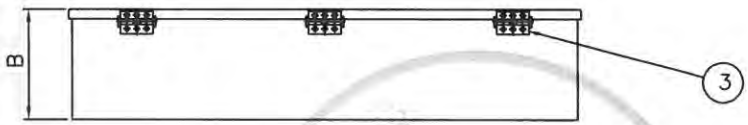


| NO | DESCRIPTION | MT'L | REMARKS |
|---|---|---|---|
| 1 | PANEL CASE | SPC | 1.6t |
| 2 | PANEL COVER | SPC | 1.6t |
| 3 | HINGE | PUR' | |
| 4 | CLAMP | PUR' | |
| 5 | SPONGE | PUR' | |

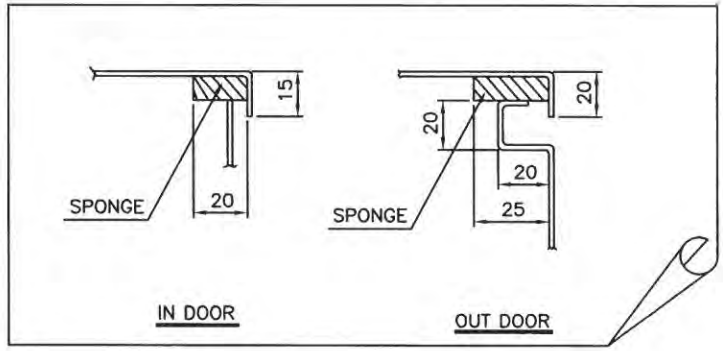


N O T E

1.PROTECTION DEGREE ;
A, INDOOR TYPE : DUST PROOF
B, OUT DOOR TYPE : SPLASH PROOF
2.FINAL PAINTING COLOR (MUNSELL NO.)
A. IN SIDE : 10B 3/5
B. OUT SIDE : 10B 3/5
3.PAINTING THICKNESS :ABOVE 40 um
4.APPLICATION VOLTAGE :AC3ø 220V(380V,440V,460V,480V)
5. OPERATION VOLTAGE : AC1ø 110,120V
6. 제어용전선 : 2.5sq KIV, HIV
7.외함 개방 구조는 다음과 같다.
1) 외함 개방시 충전부분이 차단되도록 한다.
2) 외함 개방 후 충전되어있는 부분은 IP2X 이상의 직접 접촉 방호가 되어있을것.

| SELECTION | HOIST CAPACITY | DESCRIPTION | IN DOOR | | | OUT DOOR | | | REMARK |
|---|---|---|---|---|---|---|---|---|---|
| | | | A | B | L | A | B | L | |
| | 40 TON | NORMAL | 680 | 220 | 940 | 690 | 220 | 950 | |
| | | CREEP | 680 | 220 | 940 | 690 | 220 | 950 | |

| REV | DATE | DESCRIPTION | DRAWN | CHECK | APPRVD |
|---|---|---|---|---|---|
| 1 | 05.AUG.2016 | REDRAWING | K.H.Han | - | - |

TITLE
HOISTING BOX
KDC40/5-MA

CUSTOMER

극동호이스트 주식회사
KUKDONG HOIST CO., LTD.

| DESIGN | SCALE | SHT. NO. | ORDER NO. |
|---|---|---|---|
| | | | |

DWG. NO.
KDC40-EC001

불법복제 및 배포금지

| 1 | 2 | 3 | 4 | 5 | 6 | 7 | 8 | 9 | 10 | 11 | 12 | 13 | 14 | 15 | 16 | 17 | 18 | 19 | 20 |
|---|---|---|---|---|---|---|---|---|---|---|---|---|---|---|---|---|---|---|---|
| OUTSIDE | | | | | | | | | | INSIDE | | | | | | | | | ADR'S NO. |

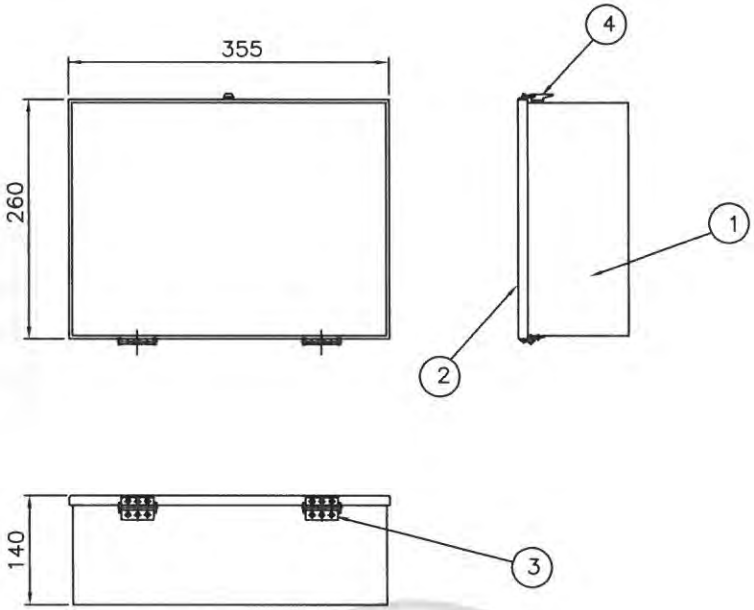


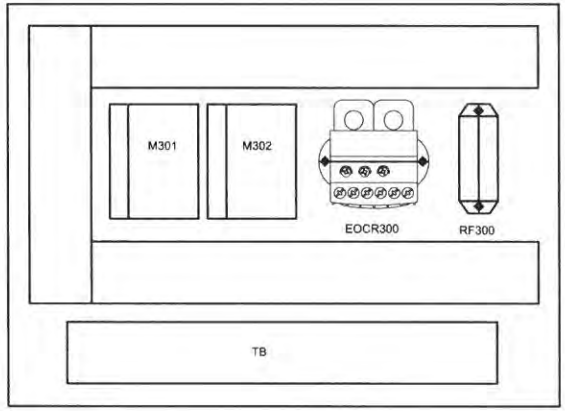


| NO | DESCRIPTION | MT'L | REMARKS |
|---|---|---|---|
| 1 | PANEL CASE | SPC | 1.6t |
| 2 | PANEL COVER | SPC | 1.6t |
| 3 | HINGE | PUR' | |
| 4 | CLAMP | PUR' | |

| NO | SYMBOL | DESCRIPTION | SPECIFICATION | Q'TY | REMARK |
|---|---|---|---|---|---|
| 1 | M101,102 | MAGNET CONTACT | DMC40b | 2 | TRAVERSING |
| 2 | EOCR100 | E.O.C.R | SS-30 | 1 | TRAVERSING |
| 3 | RF100 | SILICON RECTIFIER | SR-30 | 1 | TRAVERSING |
| 4 | TB | TERMINAL BLOCK | 20A,15A | | |

| REV | DATE | DESCRIPTION | DRAWN | CHECK | APPRVD |
|---|---|---|---|---|---|
| A | 05.AUG.2016 | REDRAWING | K.H.Han | - | - |

TITLE: TRAVERSING BOX KDC40/5-MA

CUSTOMER

극동호이스트 주식회사 KUKDONG HOIST CO., LTD.

| DESIGN | SCALE | SHT. NO. | ORDER NO. |
|---|---|---|---|
| | | | |

DWG. NO. KDC40-EC002

출판물지 및 배포금지

| NO | DESCRIPTION | MATERIAL | Q'TY | SIZE | REMARK |
|---|---|---|---|---|---|
| - | - | - | - | - | |
| | | | | | |
| | | | | | |

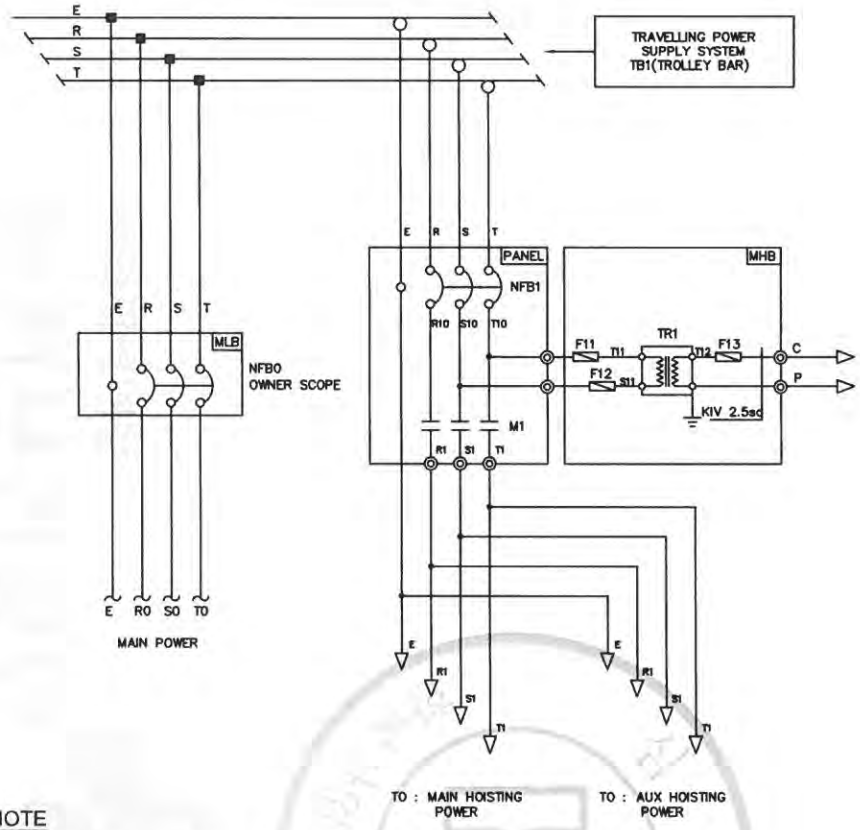


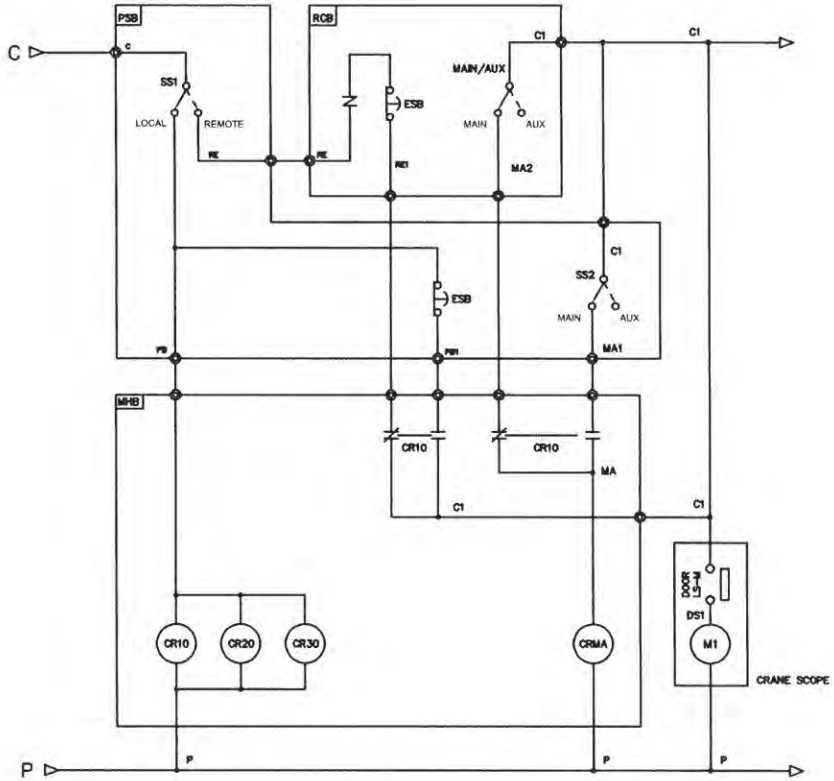


NOTE

1. 전선의 색상은 다음과 같다.
   1) 흑색 : 교류 및 직류 전원선로
   2) 적색 : 교류제어회로
   3) 주황색 : 외부 전원에서 공급되는 연동장치 제어회로
   4) 녹색 또는 녹색과 황색 혼용 : 접지선
   5) 청색 : 직류 제어선로
2. 제어용 전선 : 2.5mm KIV,HIV
3. 제작시 다소 변경 될수있음.
4. 외함 개방구조는 다음과 같을것.
   외함 개방후 충전되어있는 부분은 IP2X 이상의 직접 접촉 방호가 되어있을것.

| VOLTAGE | F11,F12 | F13 | NFB1 | TR1 | M1 |
|---|---|---|---|---|---|
| 220V | 3A | 5A | 250AF/175AT | 220/110,120V, 300VA | MC-330a |
| 380V | 2A | 5A | 250AF/125AT | 380/110,120V, 300VA | MC-185a |
| 440V | 2A | 5A | 125AF/100AT | 440/110,120V, 300VA | MC-185a |
| 460V | 2A | 5A | 125AF/100AT | 460/110,120V, 300VA | MC-185a |
| 480V | 2A | 5A | 125AF/100AT | 480/110,120V, 300VA | MC-185a |

| REV | DATE | DESCRIPTION | DRAWN | CHECK | APPRVD |
|---|---|---|---|---|---|
| 0 | 01.JUNE.2017 | FIRST ISSUE | H.S.KIM | - | M.H.KIM |

PROJECT

CLIENT

MANUFACTURER: 극동호이스트 주식회사 KUKDONG HOIST CO., LTD.

TITLE: MAIN POWER & CONTROL CIRCUIT DIAGRAM KDC40/5-MA (40T-Creep, 5T-Single)

| SCALE | DWG. NO. | SHT. NO. | REV. |
|---|---|---|---|
| - | KDC405E001 | - | - |

불법복제 및 배포금지

| 1 | 2 | 3 | 4 | 5 | 6 | 7 | 8 | 9 | 10 | 11 | 12 | 13 | 14 | 15 | 16 | 17 | 18 | 19 | 20 |
|---|---|---|---|---|---|---|---|---|---|---|---|---|---|---|---|---|---|---|---|

ADR'S NO.

REFRIGERATING 구현 시 적용

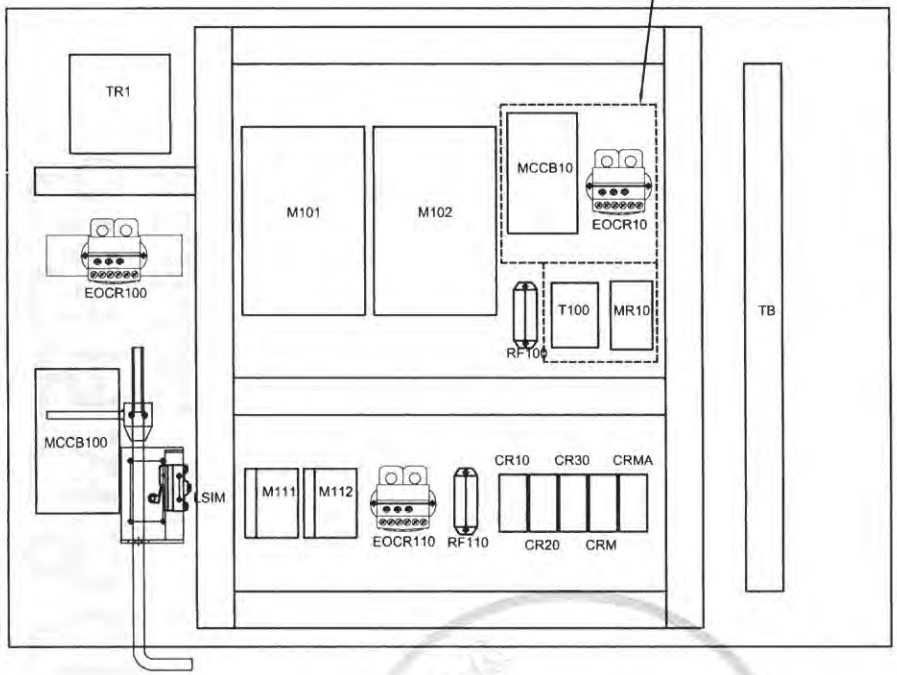


| NO | SYMBOL | DESCRIPTION | SPECIFICATION | Q'TY | REMARK |
|---|---|---|---|---|---|
| 1 | MCCB100 | NO FUSE BREAKER | ABS250AF/175AT | 1 | |
| 2 | TR1 | TRANS | 220/110,120V 300VA | 1 | |
| 3 | M101,102 | MAGNET CONTACT | MC-330a | 2 | HOISTING |
| 4 | EOCR100 | E.O.C.R | SS-150 | 1 | HOISTING |
| 5 | RF100 | SILICON RECTIFIER | SR-60 | 1 | HOISTING |
| 6 | M111,112 | MAGNET CONTACT | DMC40b | 2 | CREEP |
| 7 | EOCR110 | E.O.C.R | SS-30 | 1 | CREEP |
| 8 | RF110 | SILICON RECTIFIER | SR-30 | 1 | CREEP |
| 9 | MCCB10 | NO FUSE BREAKER | ABS30AF/5AT | 1 | REFRIGERATING |
| 10 | EOCR10 | E.O.C.R | SS-05 | 1 | REFRIGERATING |
| 11 | T100 | TIMER | AT11DN | 1 | REFRIGERATING |
| 12 | MR10 | MAGNET CONTACT | DMC12b | 1 | REFRIGERATING |
| 13 | CR10,20,30,CR,,CRMA | RELAY | MINI, 4C | 4 | SELECT |
| 14 | TB | TERMINAL BLOCK | 150A,35A,15A | | |
| 15 | LSIM | UPPER LIMIT | HY-R704A | 1 | |

NOTE

1. UPPER LIMIT LS-1의 접점 허용 전류 용량. : AC 600V, 3A
2. UPPER LIMIT LS-2의 접점 허용 전류 용량. : NFB 250AF
3. EARTH TERMINAL RESISTANCE : 0.018
4. POWER SOURCE : AC. 3ø 220V 60HZ

NOTE

1. 전선의 색상은 다음과 같다.
   1) 흑색 : 교류 및 직류 전원회로
   2) 적색 : 교류 제어회로
   3) 청색 : 직류 제어회로
   4) 주황색 : 외부 연동장치 제어회로
   5) 녹색 또는 녹색과 황색 조합 : 접지
   6) 청색 : 중성선
2. CABLE MATERIAL : KIV OR EQUIVALENT
   MIN SIZE : 2.5sq
3. 제어용 전선 : 2.5mm KIV,HIV
4. 제작시 다소 변경 될수있음.
5. 외함 개방구조는 다음과 같을것.
   1) 외함 개방시 충전부분이 차단되도록 할것.
   2) 외함 개방후 충전되어있는 부분은 IP2X 이상의 직접 접촉 방호가 되어있을것.

| REV | DATE | DESCRIPTION | DRAWN | CHECK | APPRVD |
|---|---|---|---|---|---|
| A | 05.AUG.2016 | REDRAWING | K.H.Han | - | - |

TITLE: EARTH DETAILS DRAWING
KDC40/5-MA

CUSTOMER

극동호이스트 주식회사
KUKDONG HOIST CO., LTD.

| DESIGN | SCALE | SHT. NO. | ORDER NO. |
|---|---|---|---|
| | | | |

DWG. NO. KDC40-BA02

불법복제 및 배포금지

| NO | DESCRIPTION | MATERIAL | Q'TY | SIZE | REMARK |
|---|---|---|---|---|---|
| - | - | - | - | - | |
| | | | | | |
| | | | | | |

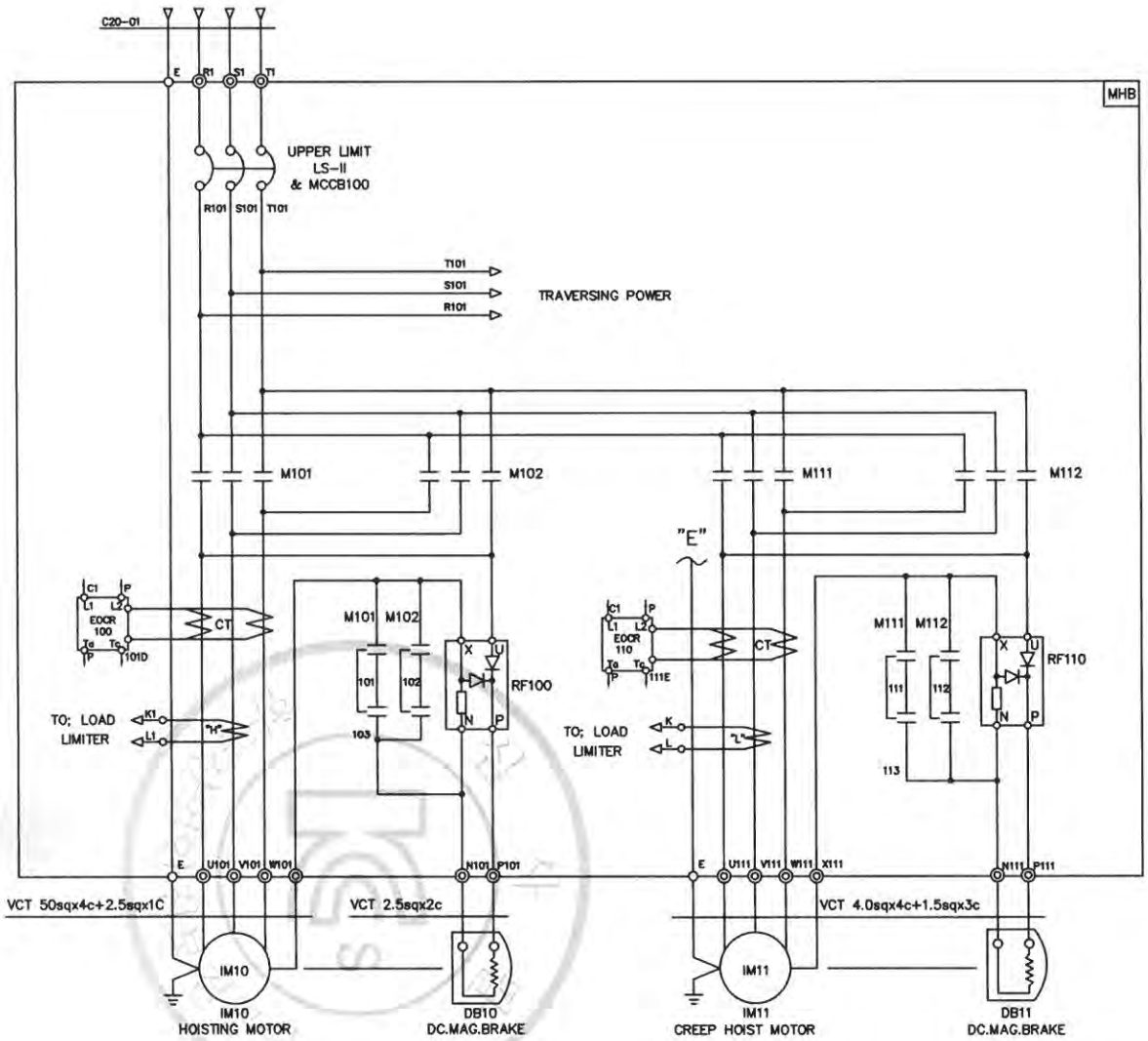


| SPECIFICATION / SYMBOLS / DESCRIPTION | HOISTING POWER | HOISTING MOTOR | CREEP MOTOR | DC.MAG' BRAKE | NO FUSE BREAKER | MAGNET CONTACTOR | | ELECTRIC OVER CURRENT RELAY | | SILICON RECTIFIER | | LOAD LIMITER | CABLE |
|---|---|---|---|---|---|---|---|---|---|---|---|---|---|
| | HOIST | IM10 | IM11 | DB10, 11 | LS-II & MCCB100 | M101,M102 | M111,M112 | EOCR100 | EOCR110 | RF100 | RF110 | LOAD LIMITER | C20-01 |
| | 40TON AC 3PH 220V 60Hz | 33KW x 6P | 3.7KWx4P | DC 100V | ABS250AF/175AT | MC-330a | DMC40b | SS-150 | SS-30 | SR-60 | SR-30 | JDL-100 | VCT 70sqx4c |
| SELECTION / MAKER | KUKDONG | | | | LS | | DONG-A | SCHNEIDER/ASAN | | ASAN | | JUNGHO | DAEDUCK |

| REV | DATE | DESCRIPTION | DRAWN | CHECK | APPRVD |
|---|---|---|---|---|---|
| 0 | 01.JUNE.2017 | FIRST ISSUE | H.S.KIM | - | M.H.KIM |

PROJECT

CLIENT

MANUFACTURER: 극동호이스트 주식회사 KUKDONG HOIST CO., LTD.

TITLE: 40T-CREEP HOISTING POWER CIRCUIT DIAGRAM KDC40

| SCALE | DWG. NO. | SHT. NO. | REV. |
|---|---|---|---|
| - | KDC40E22 | - | - |

무단배포금지

| NO | DESCRIPTION | MATERIAL | Q'TY | SIZE | REMARK |
|---|---|---|---|---|---|
| - | - | - | - | - | |
| | | | | | |
| | | | | | |

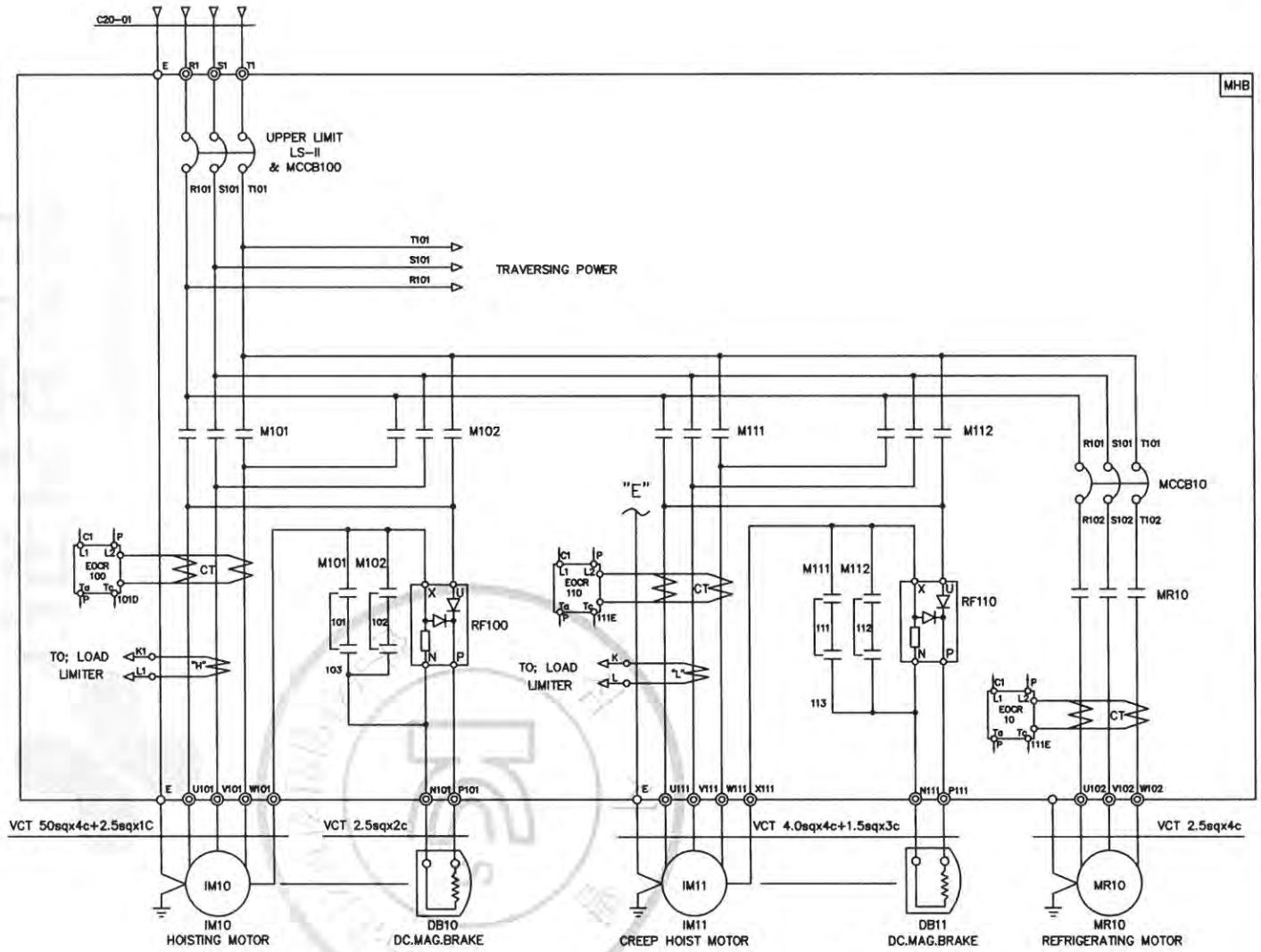


| REV | DATE | DESCRIPTION | DRAWN | CHECK | APPRVD |
|---|---|---|---|---|---|
| 0 | 01.JUNE.2017 | FIRST ISSUE | H.S.KIM | - | M.H.KIM |

PROJECT

CLIENT

MANUFACTURER: 극동호이스트 주식회사 KUKDONG HOIST CO., LTD.

TITLE: 40T-CREEP HOISTING POWER CIRCUIT DIAGRAM KDC40 (With REFRIGERATING MOTOR)

| SCALE | DWG. NO. | SHT. NO. | REV. |
|---|---|---|---|
| - | KDC40E23 | - | - |

| SPECIFICATION / SYMBOLS / DESCRIPTION | HOISTING POWER | HOISTING MOTOR | CREEP MOTOR | REFRIGERATING MOTOR | DC.MAG' BRAKE | NO FUSE BREAKER | | MAGNET CONTACTOR | | | ELECTRIC OVER CURRENT RELAY | | | SILICON RECTIFIER | | LOAD LIMITER | CABLE |
|---|---|---|---|---|---|---|---|---|---|---|---|---|---|---|---|---|---|
| | HOIST | IM10 | IM11 | MR10 | DB10, 11 | LS-II & MCCB100 | MCCB10 | M101,M102 | M111,M112 | MR10 | EOCR100 | EOCR110 | EOCR10 | RF100 | RF110 | LOAD LIMITER | C20-01 |
| | 40TON AC 3PH 220V 60Hz | 33KW x 6P | 3.7KWx4P | 0.4KWx4P | DC 100V | ABS250AF/175AT | ABS30AF/5AT | MC-330a | DMC40b | DMC12b | SS-150 | SS-30 | SS-05 | SR-60 | SR-30 | JDL-100 | VCT 70sqx4c |
| SELECTION MAKER | KUKDONG | | | | | LS | | | DONG-A | | SCHNEIDER/ASAN | | | ASAN | | JUNGHO | DAEDUCK |

본 도면은 제작 및 배포금지

| NO | DESCRIPTION | MATERIAL | Q'TY | SIZE | REMARK |
|---|---|---|---|---|---|
| - | - | - | - | - | |
| | | | | | |
| | | | | | |

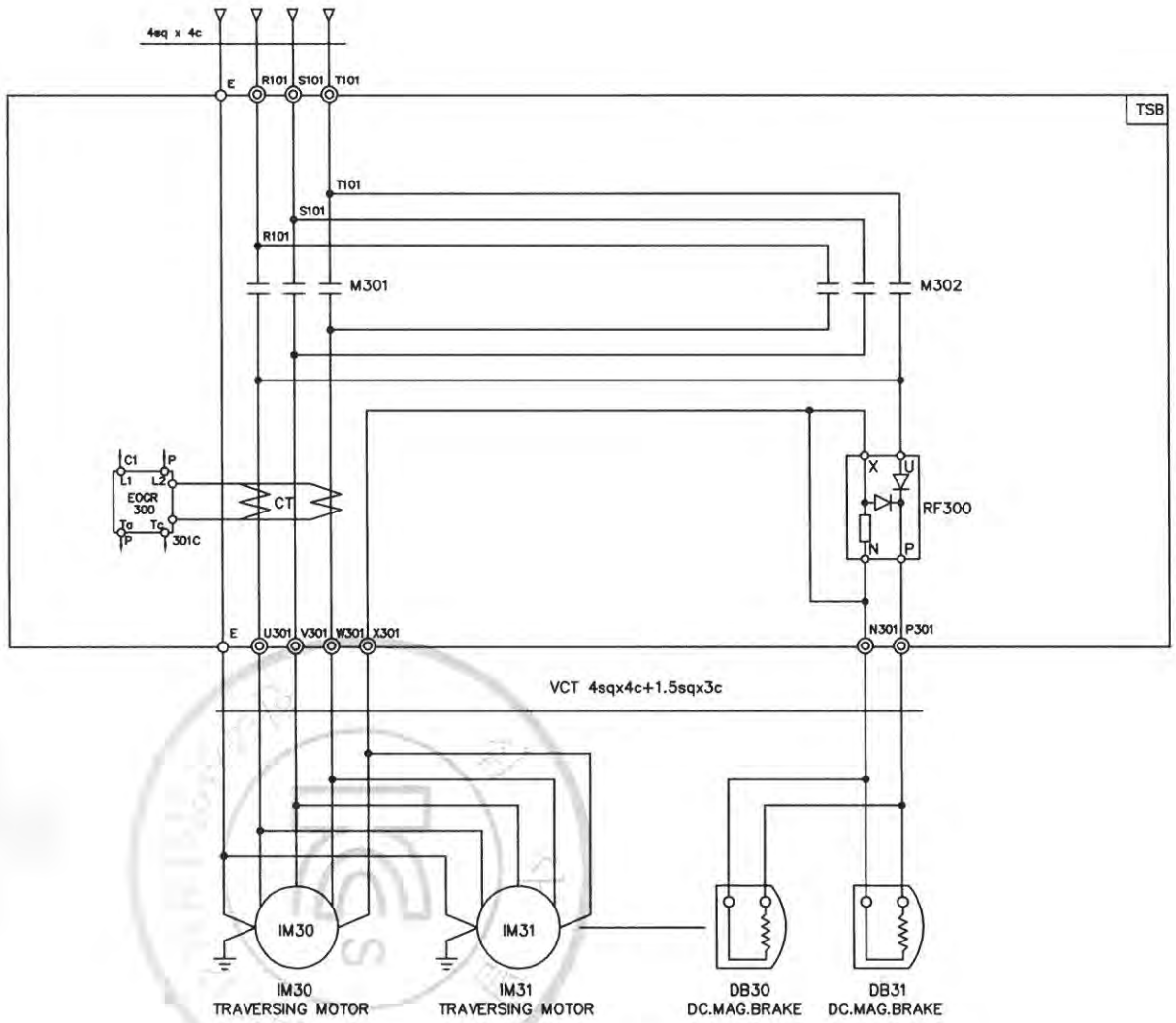


| SPECIFICATION / SYMBOLS / DESCRIPTION | TRAVERSING POWER | TRAVERSING MOTOR | DC.MAG' BRAKE | MAGNET CONTACTOR | ELECTRIC OVER CURRENT RELAY | SILICON RECTIFIER |
|---|---|---|---|---|---|---|
| | | IM 30, IM31 | DB30, DB31 | M301,M302 | EOCR300 | RF00 |
| | AC 3PH 220V 60Hz | 2.2kW x 4P | DC 100V | DMC40b | SS-30 | SR-30 |
| | AC 3PH 220V 60Hz | 1.5kW x 6P | DC 100V | DMC40b | SS-30 | SR-30 |
| SELECTION MAKER | KUKDONG | | | DONG-A | SCHNEIDER/ASAN | ASAN |

| REV | DATE | DESCRIPTION | DRAWN | CHECK | APPRVD |
|---|---|---|---|---|---|
| 0 | 01.JUNE.2017 | FIRST ISSUE | H.S.KIM | - | M.H.KIM |

PROJECT

CLIENT

MANUFACTURER: 극동호이스트 주식회사 KUKDONG HOIST CO., LTD.

TITLE: TRAVERSING POWER CIRCUIT DIAGRAM KDC40/5-MA

| SCALE | DWG. NO. | SHT. NO. | REV. |
|---|---|---|---|
| - | KDC405E24 | - | - |

불법복제 및 배포금지

| 1 | 2 | 3 | 4 | 5 | 6 | 7 | 8 | 9 | 10 | 11 | 12 | 13 | 14 | 15 | 16 | 17 | 18 | 19 | 20 |
|---|---|---|---|---|---|---|---|---|---|---|---|---|---|---|---|---|---|---|---|

ADR'S NO.

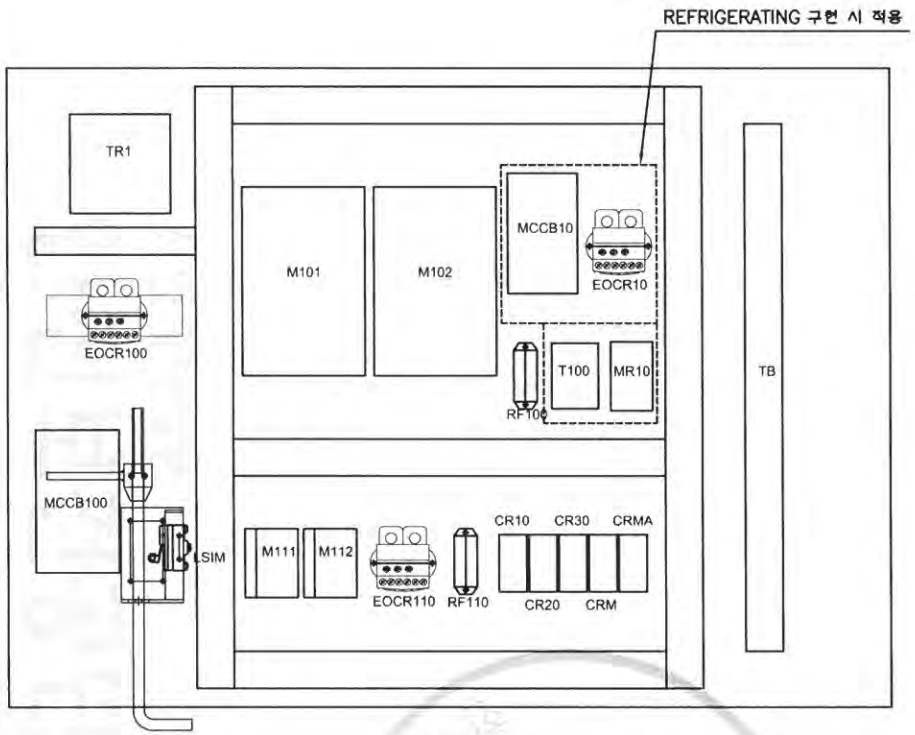


| NO | SYMBOL | DESCRIPTION | SPECIFICATION | Q'TY | REMARK |
|---|---|---|---|---|---|
| 1 | MCCB100 | NO FUSE BREAKER | ABS250AF/125AT | 1 | |
| 2 | TR1 | TRANS | 380/110,120V 300VA | 1 | |
| 3 | M101,102 | MAGNET CONTACT | MC-185a | 2 | HOISTING |
| 4 | EOCR100 | E.O.C.R | SS-100 | 1 | HOISTING |
| 5 | RF100 | SILICON RECTIFIER | SR-60 | 1 | HOISTING |
| 6 | M111,112 | MAGNET CONTACT | DMC22b | 2 | CREEP |
| 7 | EOCR110 | E.O.C.R | SS-30 | 1 | CREEP |
| 8 | RF110 | SILICON RECTIFIER | SR-30 | 1 | CREEP |
| 9 | MCCB10 | NO FUSE BREAKER | ABS30AF/5AT | 1 | REFRIGERATING |
| 10 | EOCR10 | E.O.C.R | SS-05 | 1 | REFRIGERATING |
| 11 | T100 | TIMER | AT11DN | 1 | REFRIGERATING |
| 12 | MR10 | MAGNET CONTACT | DMC12b | 1 | REFRIGERATING |
| 13 | CR10,20,30,CR,,CRMA | RELAY | MINI, 4C | 4 | SELECT |
| 14 | TB | TERMINAL BLOCK | 100A,25A,15A | | |
| 15 | LSIM | UPPER LIMIT | HY-R704A | 1 | |

NOTE

1. UPPER LIMIT LS-1의 접점 허용 전류 용량. : AC 600V, 3A
2. UPPER LIMIT LS-2의 접점 허용 전류 용량. : NFB 250AF
3. EARTH TERMINAL RESISTANCE : 0.018
4. POWER SOURCE : AC. 3ø 380V 60HZ

NOTE

1. 전선의 색상은 다음과 같다.
   1) 흑색 : 고류 및 직류 전원회로
   2) 적색 : 고류 제어회로
   3) 청색 : 직류 제어회로
   4) 주황색 : 외부 연동장치 제어회로
   5) 녹색 또는 녹색과 황색 조합 : 접지
   6) 청색 : 중성선
2. CABLE MATERIAL : KIV OR EQUIVALENT
   MIN SIZE : 2.5sq
3. 제어용 전선 : 2.5mm KIV,HIV
4. 제작시 다소 변경 될수있음.
5. 외함 개방구조는 다음과 같을것.
   1) 외함 개방시 충전부분이 차단되도록 할것.
   2) 외함 개방후 충전되어있는 부분은 IP2X 이상의 직접 접촉 방호가 되어있을것.

| REV | DATE | DESCRIPTION | DRAWN | CHECK | APPRVD |
|---|---|---|---|---|---|
| A | 05.AUG.2016 | REDRAWING | K.H.Han | - | - |

TITLE: EARTH DETAILS DRAWING
KDC40/5-MA

CUSTOMER

극동호이스트 주식회사
KUKDONG HOIST CO., LTD.

| DESIGN | SCALE | SHT. NO. | ORDER NO. |
|---|---|---|---|
| | | | |

DWG. NO. KDC40-BA03

불법복제 및 배포금지

| NO | DESCRIPTION | MATERIAL | Q'TY | SIZE | REMARK |
|---|---|---|---|---|---|
| - | - | - | - | - | |

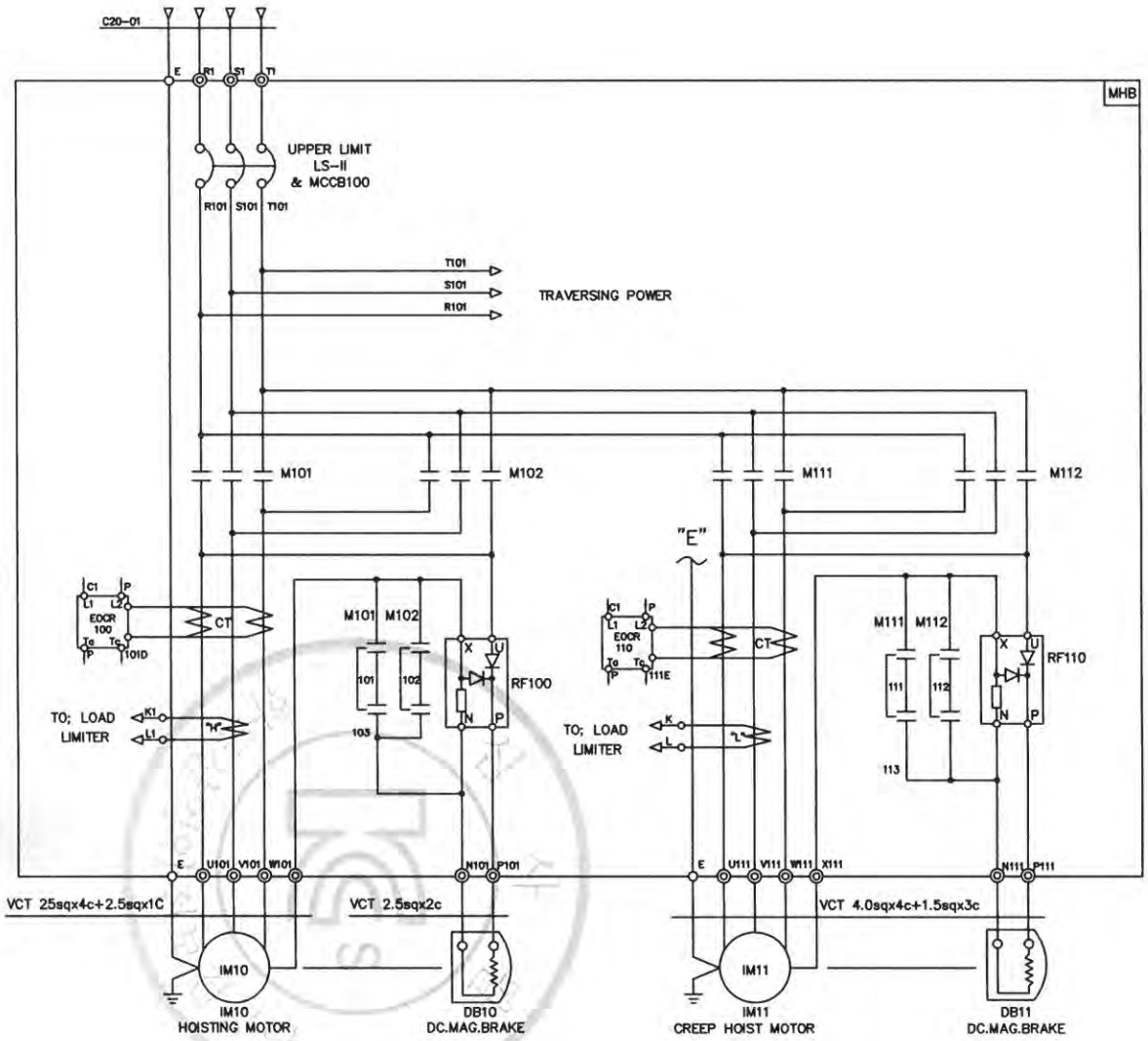


| REV | DATE | DESCRIPTION | DRAWN | CHECK | APPRVD |
|---|---|---|---|---|---|
| 0 | 01.JUNE.2017 | FIRST ISSUE | H.S.KIM | - | M.H.KIM |

PROJECT

CLIENT

MANUFACTURER: 극동호이스트 주식회사 KUKDONG HOIST CO., LTD.

TITLE: 40T-CREEP HOISTING POWER CIRCUIT DIAGRAM KDC40

| SCALE | DWG. NO. | SHT. NO. | REV. |
|---|---|---|---|
| - | KDC40E32 | - | - |

| SPECIFICATION / SYMBOLS / DESCRIPTION | HOISTING POWER | HOISTING MOTOR | CREEP MOTOR | DC.MAG' BRAKE | NO FUSE BREAKER | MAGNET CONTACTOR | | ELECTRIC OVER CURRENT RELAY | | SILICON RECTIFIER | | LOAD LIMITER | CABLE |
|---|---|---|---|---|---|---|---|---|---|---|---|---|---|
| | HOIST | IM10 | IM11 | DB10, 11 | LS-II & MCCB100 | M101,M102 | M111,M112 | EOCR100 | EOCR110 | RF100 | RF110 | LOAD LIMITER | C20-01 |
| | 40TON AC 3PH 380V 60Hz | 33KW x 6P | 3.7KWx4P | DC 100V | ABS250AF/125AT | MC-185a | DMC22b | SS-100 | SS-30 | SR-60 | SR-30 | JDL-100 | VCT 35sqx4c |
| SELECTION / MAKER | KUKDONG | | | | LS | | DONG-A | SCHNEIDER/ASAN | | ASAN | | JUNGHO | DAEDUCK |

무단복제 및 배포금지

| NO | DESCRIPTION | MATERIAL | Q'TY | SIZE | REMARK |
|---|---|---|---|---|---|
| - | - | - | - | - | |
| | | | | | |
| | | | | | |

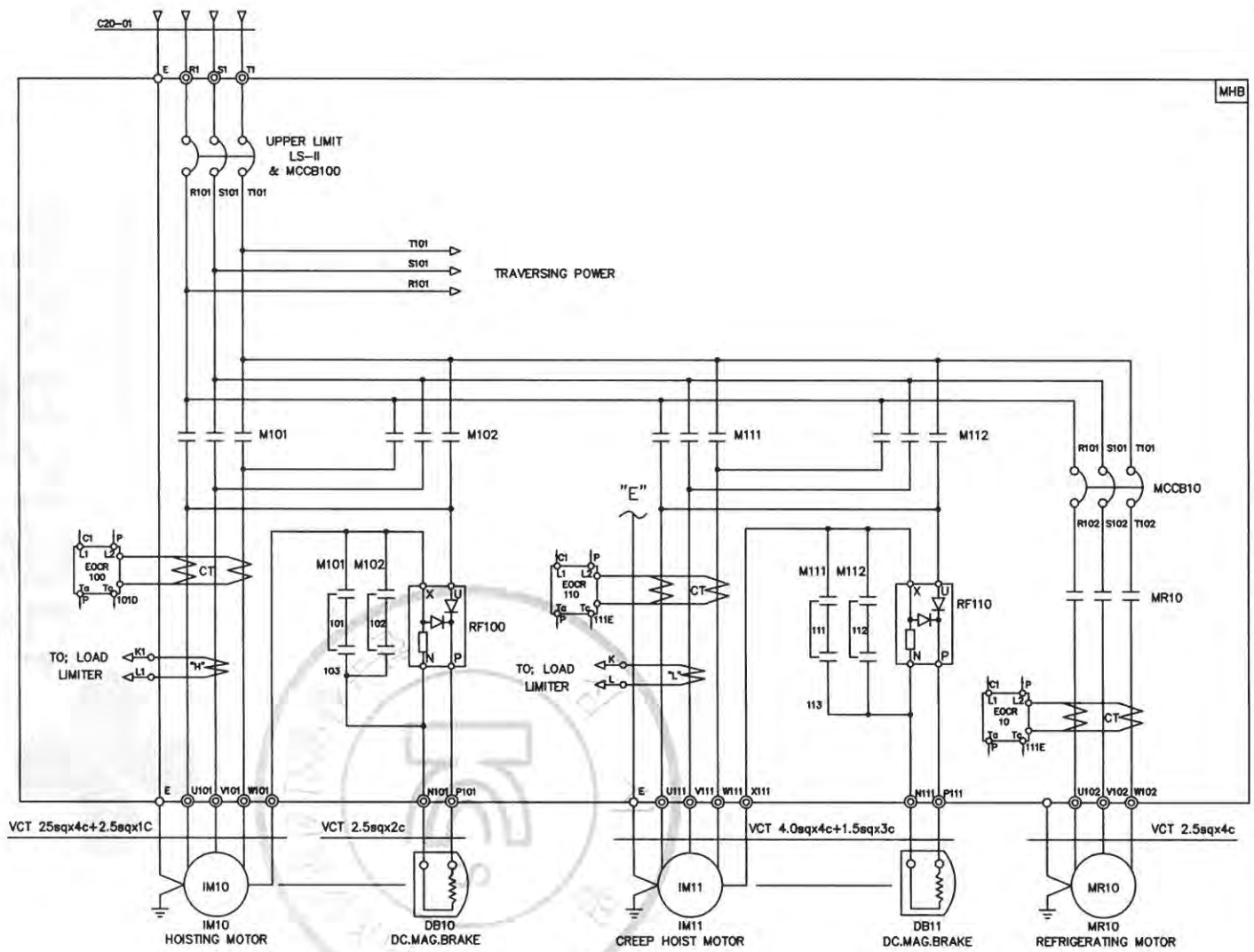


| REV | DATE | DESCRIPTION | DRAWN | CHECK | APPRVD |
|---|---|---|---|---|---|
| 0 | 01.JUNE.2017 | FIRST ISSUE | H.S.KIM | - | M.H.KIM |

PROJECT

CLIENT

MANUFACTURER: 극동호이스트 주식회사 KUKDONG HOIST CO., LTD.

TITLE: 40T-CREEP HOISTING POWER CIRCUIT DIAGRAM
KDC40 (With REFRIGERATING MOTOR)

| SCALE | DWG. NO. | SHT. NO. | REV. |
|---|---|---|---|
| - | KDC40E33 | - | - |

| SPECIFICATION / SYMBOLS / DESCRIPTION | HOISTING POWER | HOISTING MOTOR | CREEP MOTOR | REFRIGERATING MOTOR | DC.MAG' BRAKE | NO FUSE BREAKER | | MAGNET CONTACTOR | | | ELECTRIC OVER CURRENT RELAY | | | SILICON RECTIFIER | | LOAD LIMITER | CABLE |
|---|---|---|---|---|---|---|---|---|---|---|---|---|---|---|---|---|---|
| | HOIST | IM10 | IM11 | MR10 | DB10, 11 | LS-II & MCCB100 | MCCB10 | M101,M102 | M111,M112 | MR10 | EOCR100 | EOCR110 | EOCR10 | RF100 | RF110 | LOAD LIMITER | C20-01 |
| | 40TON AC 3PH 380V 60Hz | 33KW x 6P | 3.7KWx4P | 0.4KWx4P | DC 100V | ABS250AF/125AT | ABS30AF/5AT | MC-185a | DMC22b | DMC12b | SS-100 | SS-30 | SS-05 | SR-60 | SR-30 | JDL-100 | VCT 35sqx4c |
| SELECTION MAKER | KUKDONG | | | | | LS | | DONG-A | | | SCHNEIDER/ASAN | | | ASAN | | JUNGHO | DAEDUCK |

본 배포 및 제 품 사용금지

| NO | DESCRIPTION | MATERIAL | Q'TY | SIZE | REMARK |
|---|---|---|---|---|---|
| - | - | - | - | - | |
| | | | | | |
| | | | | | |

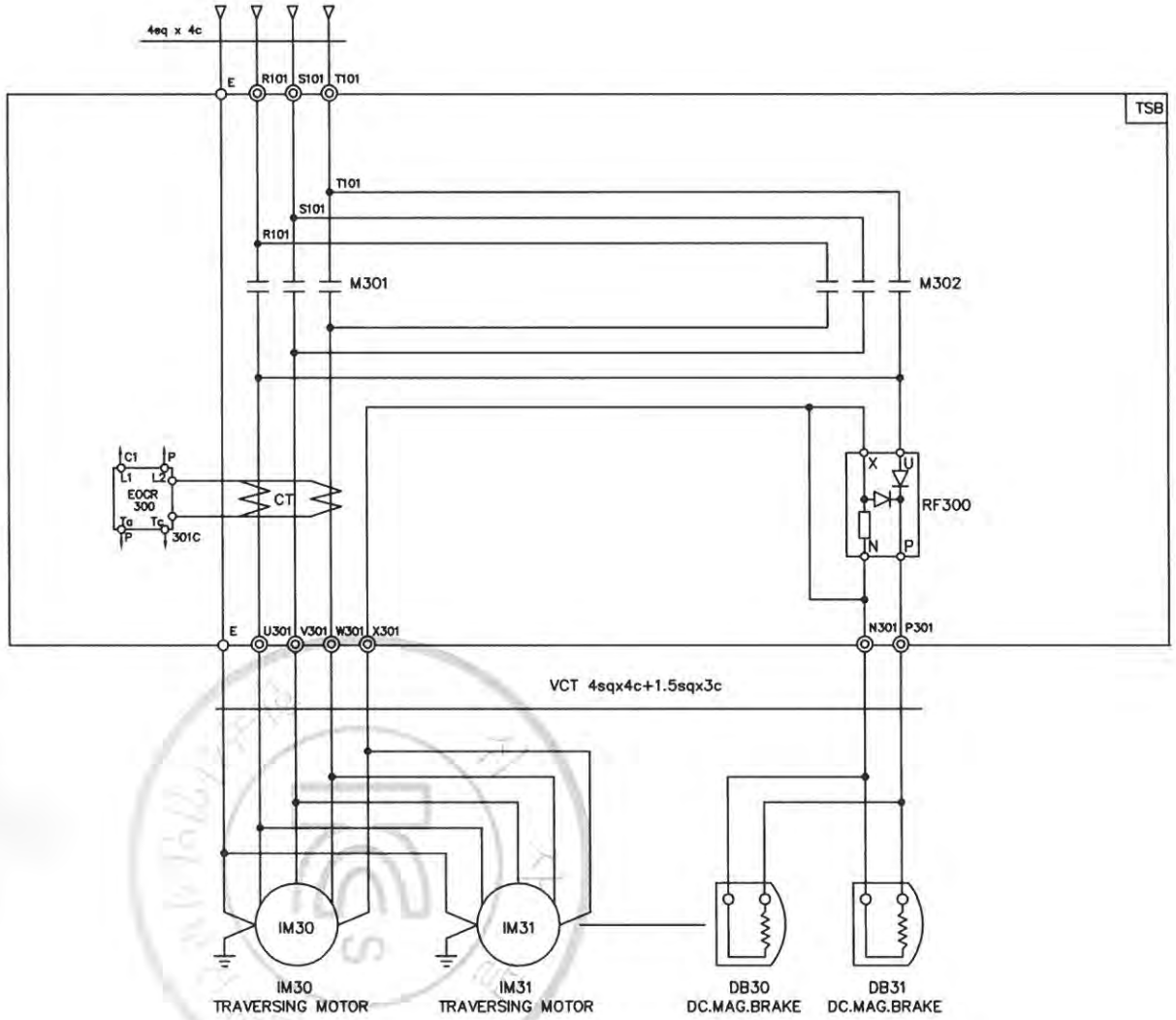


| SPECIFICATION / SYMBOLS / DESCRIPTION | TRAVERSING POWER | TRAVERSING MOTOR | DC.MAG' BRAKE | MAGNET CONTACTOR | ELECTRIC OVER CURRENT RELAY | SILICON RECTIFIER |
|---|---|---|---|---|---|---|
| | | IM 30, IM31 | DB30, DB31 | M301,M302 | EOCR300 | RF00 |
| | AC 3PH 380V 60Hz | 2.2kW x 4P | DC 100V | DMC40b | SS-30 | SR-30 |
| | AC 3PH 380V 60Hz | 1.5kW x 6P | DC 100V | DMC40b | SS-30 | SR-30 |
| SELECTION MAKER | KUKDONG | | | DONG-A | SCHNEIDER/ASAN | ASAN |

| REV | DATE | DESCRIPTION | DRAWN | CHECK | APPRVD |
|---|---|---|---|---|---|
| 0 | 01.JUNE.2017 | FIRST ISSUE | H.S.KIM | - | M.H.KIM |

PROJECT

CLIENT

MANUFACTURER: 극동호이스트 주식회사 KUKDONG HOIST CO., LTD.

TITLE: TRAVERSING POWER CIRCUIT DIAGRAM KDC40/5-MA

| SCALE | DWG. NO. | SHT. NO. | REV. |
|---|---|---|---|
| - | KDC405E34 | - | - |

불법복제 및 배포금지

| 1 | 2 | 3 | 4 | 5 | 6 | 7 | 8 | 9 | 10 | 11 | 12 | 13 | 14 | 15 | 16 | 17 | 18 | 19 | 20 |
|---|---|---|---|---|---|---|---|---|---|---|---|---|---|---|---|---|---|---|---|

ADR'S NO.

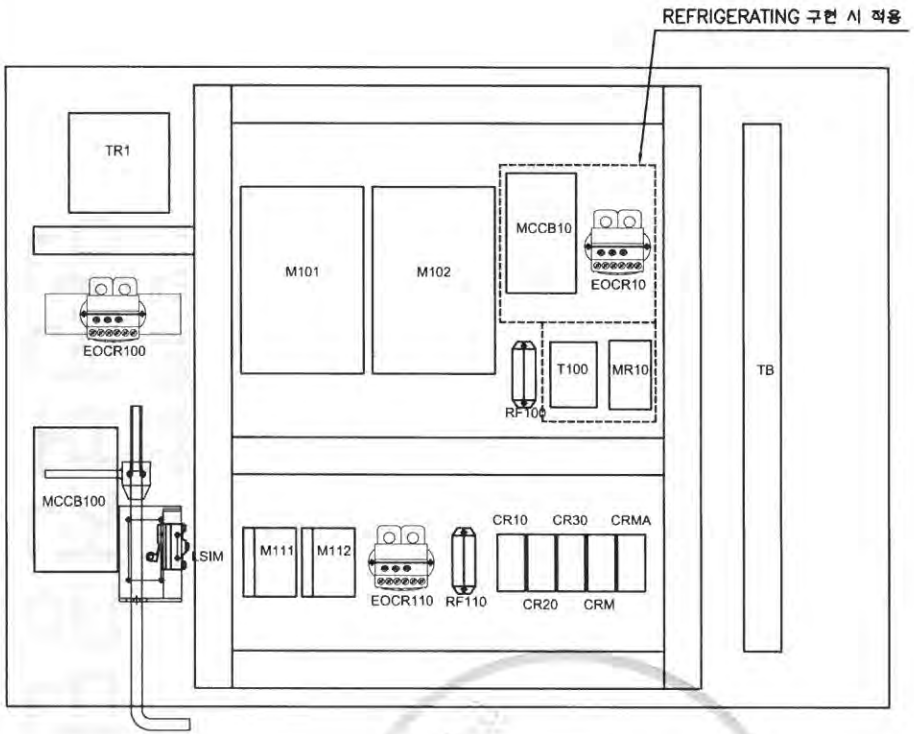


| NO | SYMBOL | DESCRIPTION | SPECIFICATION | Q'TY | REMARK |
|---|---|---|---|---|---|
| 1 | MCCB100 | NO FUSE BREAKER | ABS125AF/100AT | 1 | |
| 2 | TR1 | TRANS | 440/110,120V 300VA | 1 | |
| 3 | M101,102 | MAGNET CONTACT | MC-185a | 2 | HOISTING |
| 4 | EOCR100 | E.O.C.R | SS-100 | 1 | HOISTING |
| 5 | RF100 | SILICON RECTIFIER | SR-60 | 1 | HOISTING |
| 6 | M111,112 | MAGNET CONTACT | DMC22b | 2 | CREEP |
| 7 | EOCR110 | E.O.C.R | SS-30 | 1 | CREEP |
| 8 | RF110 | SILICON RECTIFIER | SR-30 | 1 | CREEP |
| 9 | MCCB10 | NO FUSE BREAKER | ABS30AF/5AT | 1 | REFRIGERATING |
| 10 | EOCR10 | E.O.C.R | SS-05 | 1 | REFRIGERATING |
| 11 | T100 | TIMER | AT11DN | 1 | REFRIGERATING |
| 12 | MR10 | MAGNET CONTACT | DMC12b | 1 | REFRIGERATING |
| 13 | CR10,20,30,CR,,CRMA | RELAY | MINI, 4C | 4 | SELECT |
| 14 | TB | TERMINAL BLOCK | 100A,25A,15A | | |
| 15 | LSIM | UPPER LIMIT | HY-R704A | 1 | |

NOTE

1. UPPER LIMIT LS-1의 접점 허용 전류 용량. : AC 600V, 3A
2. UPPER LIMIT LS-2의 접점 허용 전류 용량. : NFB 125AF
3. EARTH TERMINAL RESISTANCE : 0.018
4. POWER SOURCE : AC. 3ø 440V 60HZ

NOTE

1. 전선의 색상은 다음과 같다.
   1) 흑색 : 고류 및 직류 전원회로
   2) 적색 : 고류 제어회로
   3) 청색 : 직류 제어회로
   4) 주황색 : 외부 연동장치 제어회로
   5) 녹색 또는 녹색과 황색 조합 : 접지
   6) 청색 : 중성선
2. CABLE MATERIAL : KIV OR EQUIVALENT
   MIN SIZE : 2.5sq
3. 제어용 전선 : 2.5mm KIV,HIV
4. 제작시 다소 변경 될수있음.
5. 외함 개방구조는 다음과 같을것.
   1) 외함 개방시 충전부분이 차단되도록 할것.
   2) 외함 개방후 충전되어있는 부분은 IP2X 이상의 직접 접촉 방호가 되어있을것.

| REV | DATE | DESCRIPTION | DRAWN | CHECK | APPRVD |
|---|---|---|---|---|---|
| ⚠ | 05.AUG.2016 | REDRAWING | K.H.Han | - | - |

TITLE: EARTH DETAILS DRAWING
KDC40/5-MA

CUSTOMER

극동호이스트 주식회사
KUKDONG HOIST CO., LTD.

| DESIGN | SCALE | SHT. NO. | ORDER NO. |
|---|---|---|---|
| | | | |

DWG. NO. KDC40-BA04

불법복제 및 배포금지

| NO | DESCRIPTION | MATERIAL | Q'TY | SIZE | REMARK |
|---|---|---|---|---|---|
| - | - | - | - | - | |
| | | | | | |
| | | | | | |

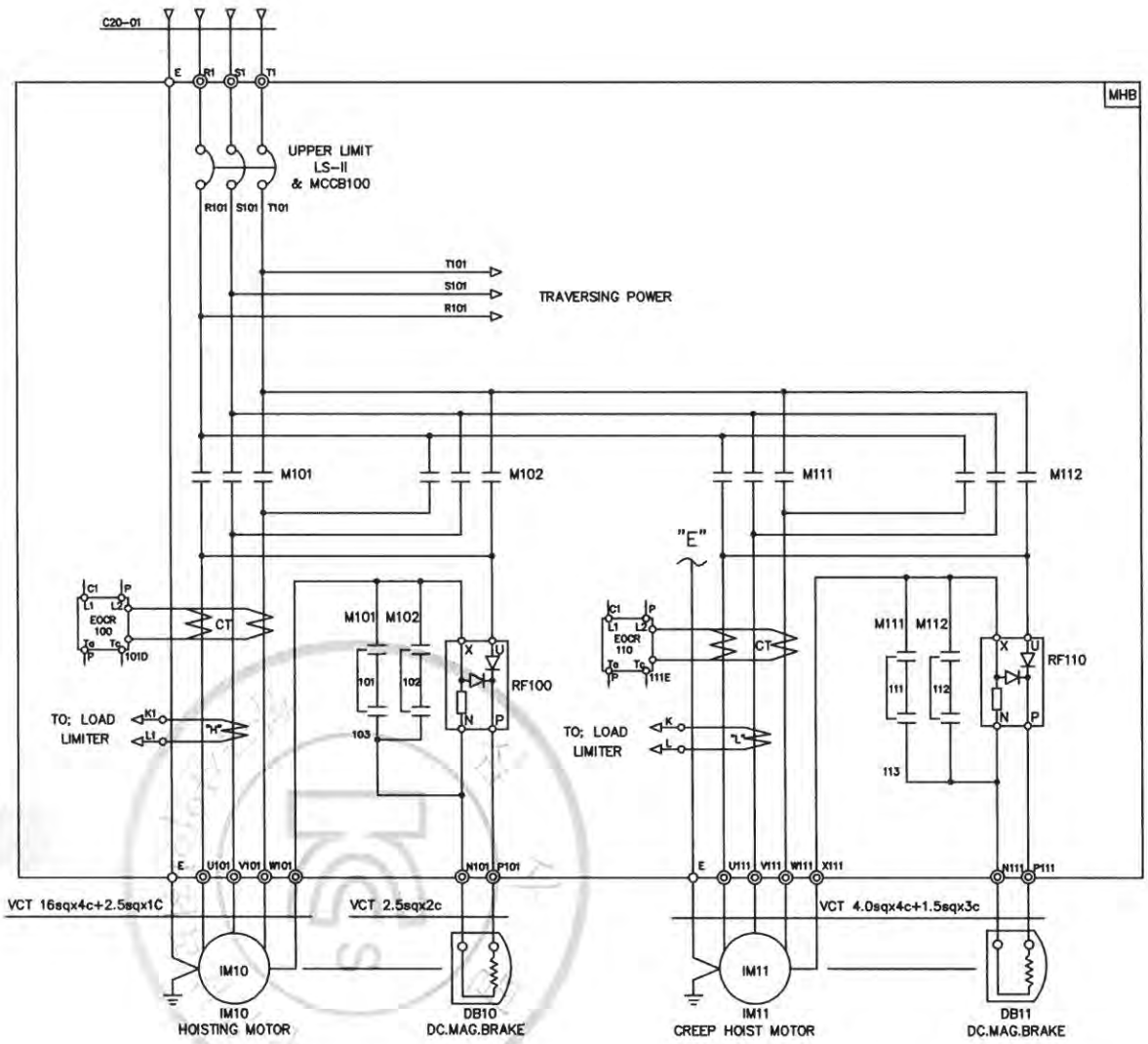


| REV | DATE | DESCRIPTION | DRAWN | CHECK | APPRVD |
|---|---|---|---|---|---|
| 0 | 01.JUNE.2017 | FIRST ISSUE | H.S.KIM | - | M.H.KIM |

PROJECT

CLIENT

MANUFACTURER: 극동호이스트 주식회사 KUKDONG HOIST CO., LTD.

TITLE: 40T-CREEP HOISTING POWER CIRCUIT DIAGRAM KDC40

| SCALE | DWG. NO. | SHT. NO. | REV. |
|---|---|---|---|
| - | KDC40E42 | - | - |

| SPECIFICATION / SYMBOLS / DESCRIPTION | HOISTING POWER | HOISTING MOTOR | CREEP MOTOR | DC.MAG' BRAKE | NO FUSE BREAKER | MAGNET CONTACTOR | | ELECTRIC OVER CURRENT RELAY | | SILICON RECTIFIER | | LOAD LIMITER | CABLE |
|---|---|---|---|---|---|---|---|---|---|---|---|---|---|
| | HOIST | IM10 | IM11 | DB10, 11 | LS-II & MCCB100 | M101,M102 | M111,M112 | EOCR100 | EOCR110 | RF100 | RF110 | LOAD LIMITER | C20-01 |
| | 40TON AC 3PH 440V 60Hz | 33KW x 6P | 3.7KWx4P | DC 100V | ABS125AF/100AT | MC-185a | DMC22b | SS-100 | SS-30 | SR-60 | SR-30 | JDL-100 | VCT 25sqx4c |
| SELECTION MAKER | KUKDONG | | | | LS | | DONG-A | SCHNEIDER/ASAN | | ASAN | | JUNGHO | DAEDUCK |

불법복제 및 배포금지

| NO | DESCRIPTION | MATERIAL | Q'TY | SIZE | REMARK |
|---|---|---|---|---|---|
| - | - | - | - | - | |
| | | | | | |
| | | | | | |

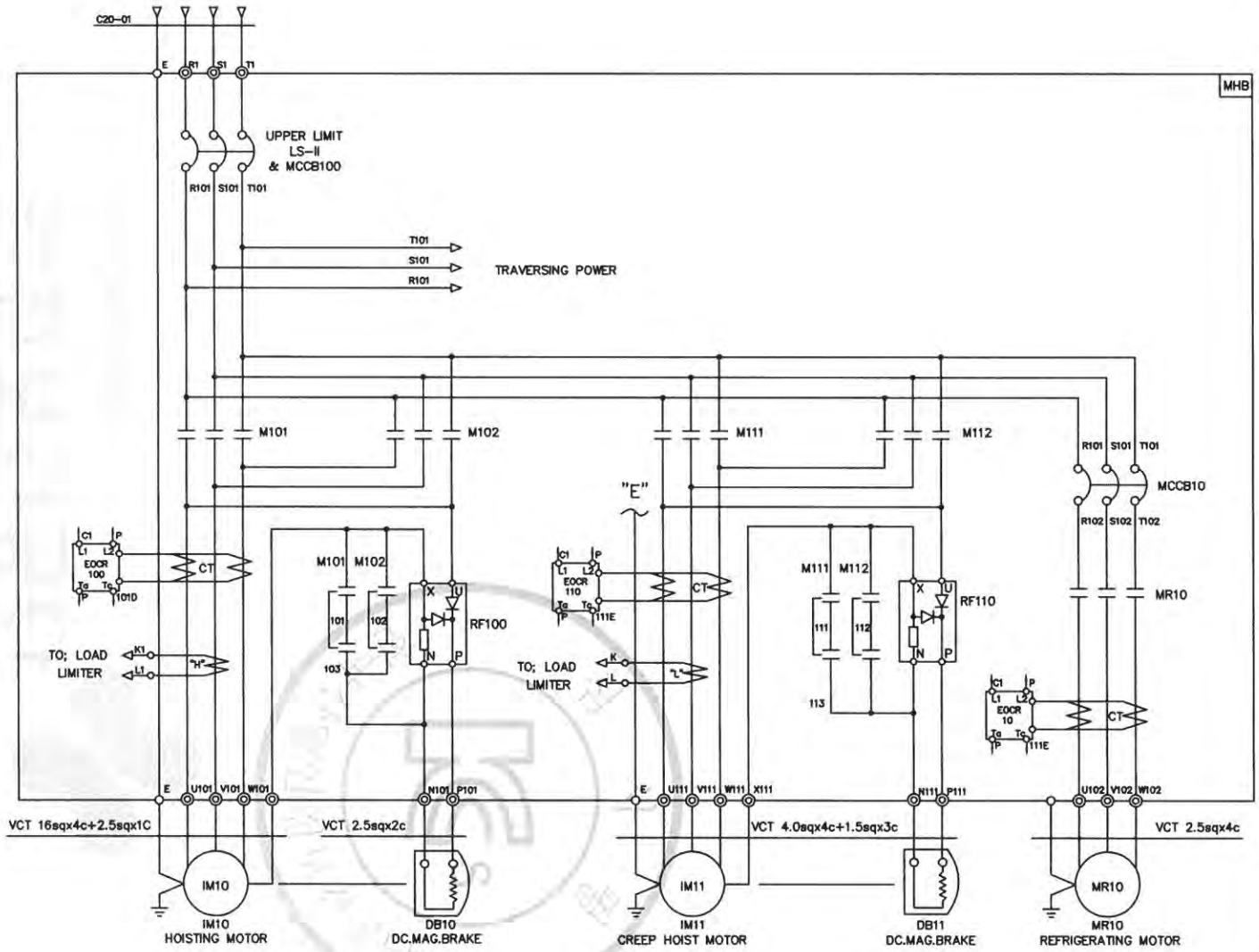


| REV | DATE | DESCRIPTION | DRAWN | CHECK | APPRVD |
|---|---|---|---|---|---|
| 0 | 01.JUNE.2017 | FIRST ISSUE | H.S.KIM | - | M.H.KIM |

PROJECT

CLIENT

MANUFACTURER: 극동호이스트 주식회사 KUKDONG HOIST CO., LTD.

TITLE: 40T-CREEP HOISTING POWER CIRCUIT DIAGRAM KDC40 (With REFRIGERATING MOTOR)

SCALE: - | DWG. NO.: KDC40E43 | SHT. NO.: - | REV.: -

| SPECIFICATION / SYMBOLS / DESCRIPTION | HOISTING POWER | HOISTING MOTOR | CREEP MOTOR | REFRIGERATING MOTOR | DC.MAG' BRAKE | NO FUSE BREAKER | | MAGNET CONTACTOR | | | ELECTRIC OVER CURRENT RELAY | | | SILICON RECTIFIER | | LOAD LIMITER | CABLE |
|---|---|---|---|---|---|---|---|---|---|---|---|---|---|---|---|---|---|
| | HOIST | IM10 | IM11 | MR10 | DB10, 11 | LS-II & MCCB100 | MCCB10 | M101,M102 | M111,M112 | MR10 | EOCR100 | EOCR110 | EOCR10 | RF100 | RF110 | LOAD LIMITER | C20-01 |
| | 40TON AC 3PH 440V 60Hz | 33KW x 6P | 3.7KWx4P | 0.4KWx4P | DC 100V | ABS125AF/100AT | ABS30AF/5AT | MC-185a | DMC22b | DMC12b | SS-100 | SS-30 | SS-05 | SR-60 | SR-30 | JDL-100 | VCT 25sqx4c |
| SELECTION MAKER | KUKDONG | | | | | LS | | | DONG-A | | SCHNEIDER/ASAN | | | ASAN | | JUNGHO | DAEDUCK |

본 설계도면은 배포금지

| NO | DESCRIPTION | MATERIAL | Q'TY | SIZE | REMARK |
|---|---|---|---|---|---|
| - | - | - | - | - | |
| | | | | | |
| | | | | | |

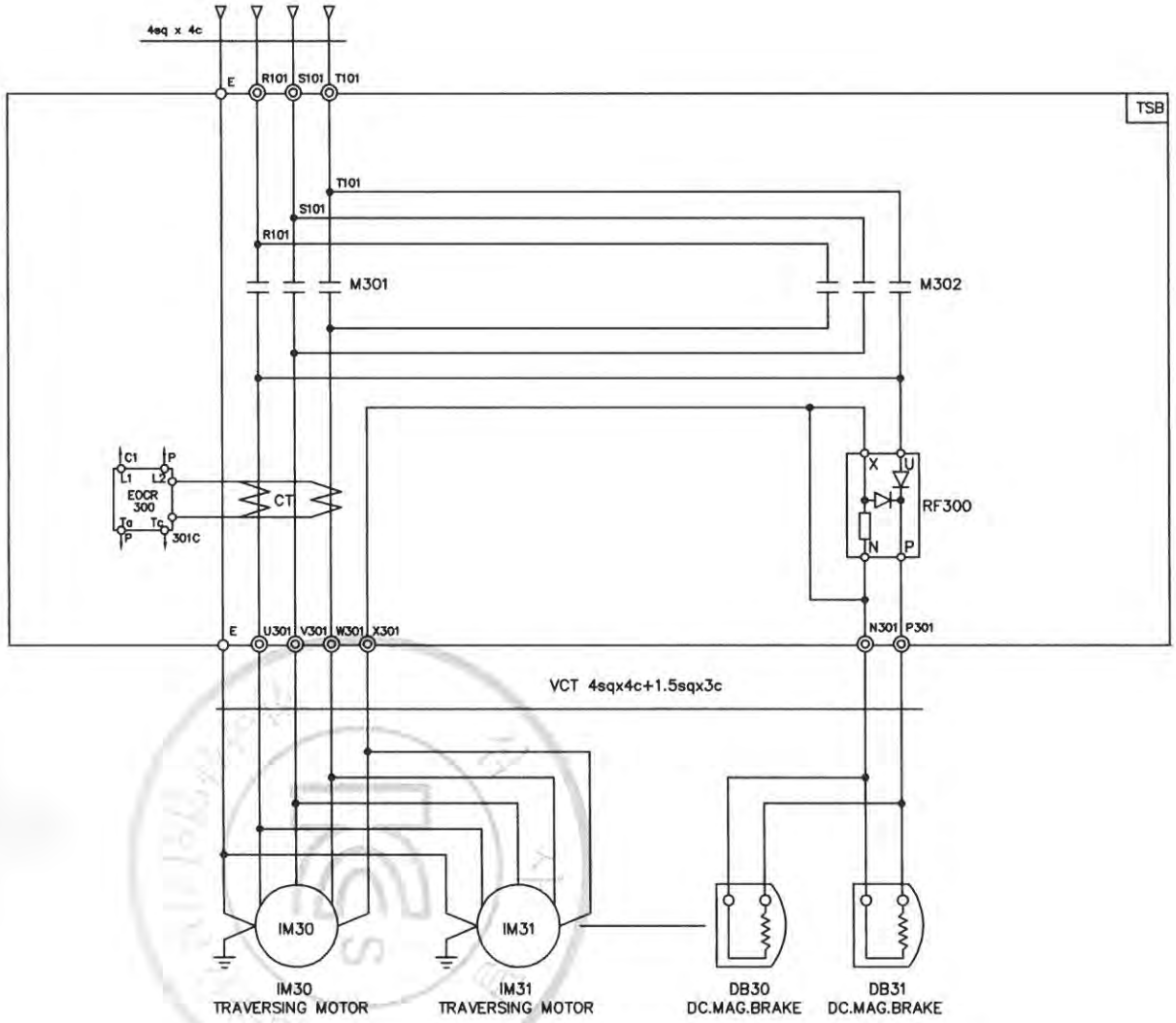


| SPECIFICATION / SYMBOLS / DESCRIPTION | TRAVERSING POWER | TRAVERSING MOTOR | DC.MAG' BRAKE | MAGNET CONTACTOR | ELECTRIC OVER CURRENT RELAY | SILICON RECTIFIER |
|---|---|---|---|---|---|---|
| | | IM 30, IM31 | DB30, DB31 | M301,M302 | EOCR300 | RF00 |
| | AC 3PH 440V 60Hz | 2.2kW x 4P | DC 100V | DMC40b | SS-30 | SR-30 |
| | AC 3PH 440V 60Hz | 1.5kW x 6P | DC 100V | DMC40b | SS-30 | SR-30 |
| SELECTION MAKER | KUKDONG | | | DONG-A | SCHNEIDER/ASAN | ASAN |

| REV | DATE | DESCRIPTION | DRAWN | CHECK | APPRVD |
|---|---|---|---|---|---|
| 0 | 01.JUNE.2017 | FIRST ISSUE | H.S.KIM | - | M.H.KIM |

PROJECT

CLIENT

MANUFACTURER: 극동호이스트 주식회사 KUKDONG HOIST CO., LTD.

TITLE: TRAVERSING POWER CIRCUIT DIAGRAM KDC40/5-MA

| SCALE | DWG. NO. | SHT. NO. | REV. |
|---|---|---|---|
| - | KDC405E44 | - | - |

불법복제 및 배포금지

| 1 | 2 | 3 | 4 | 5 | 6 | 7 | 8 | 9 | 10 | 11 | 12 | 13 | 14 | 15 | 16 | 17 | 18 | 19 | 20 |
|---|---|---|---|---|---|---|---|---|---|---|---|---|---|---|---|---|---|---|---|

ADR'S NO.

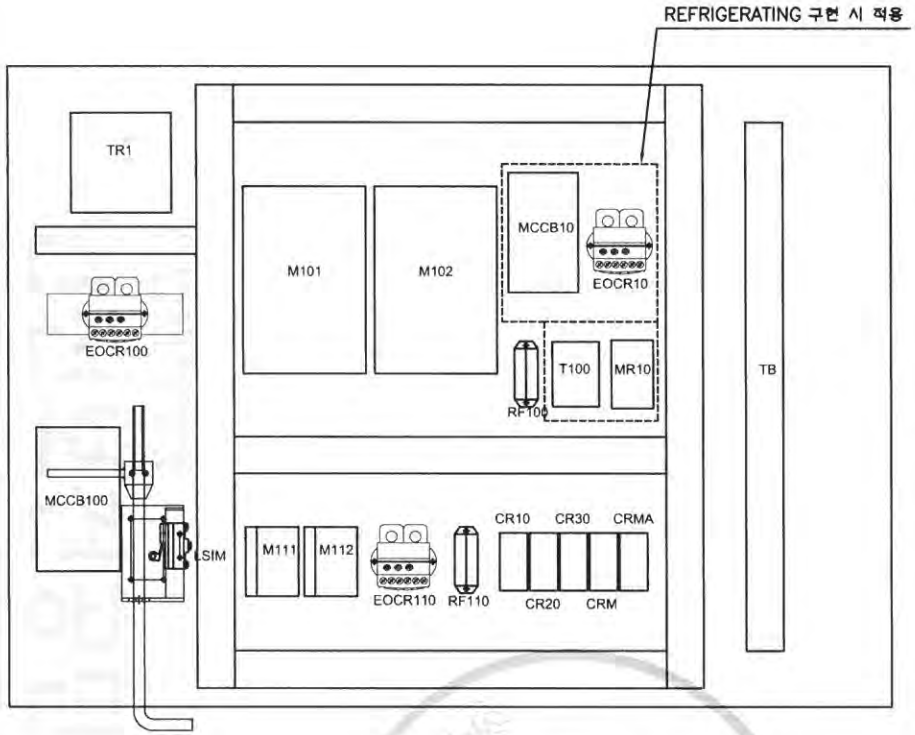


| NO | SYMBOL | DESCRIPTION | SPECIFICATION | Q'TY | REMARK |
|---|---|---|---|---|---|
| 1 | MCCB100 | NO FUSE BREAKER | ABS125AF/100AT | 1 | |
| 2 | TR1 | TRANS | 460/110,120V 300VA | 1 | |
| 3 | M101,102 | MAGNET CONTACT | MC-185a | 2 | HOISTING |
| 4 | EOCR100 | E.O.C.R | SS-100 | 1 | HOISTING |
| 5 | RF100 | SILICON RECTIFIER | SR-60 | 1 | HOISTING |
| 6 | M111,112 | MAGNET CONTACT | DMC22b | 2 | CREEP |
| 7 | EOCR110 | E.O.C.R | SS-30 | 1 | CREEP |
| 8 | RF110 | SILICON RECTIFIER | SR-30 | 1 | CREEP |
| 9 | MCCB10 | NO FUSE BREAKER | ABS30AF/5AT | 1 | REFRIGERATING |
| 10 | EOCR10 | E.O.C.R | SS-05 | 1 | REFRIGERATING |
| 11 | T100 | TIMER | AT11DN | 1 | REFRIGERATING |
| 12 | MR10 | MAGNET CONTACT | DMC12b | 1 | REFRIGERATING |
| 13 | CR10,20,30,CR,,CRMA | RELAY | MINI, 4C | 4 | SELECT |
| 14 | TB | TERMINAL BLOCK | 100A,25A,15A | | |
| 15 | LSIM | UPPER LIMIT | HY-R704A | 1 | |

NOTE

1. 전선의 색상은 다음과 같다.
   1) 흑색 : 교류 및 직류 전원회로
   2) 적색 : 교류 제어회로
   3) 청색 : 직류 제어회로
   4) 주황색 : 외부 연동장치 제어회로
   5) 녹색 또는 녹색과 황색 조합 : 접지
   6) 청색 : 중성선
2. CABLE MATERIAL : KIV OR EQUIVALENT
   MIN SIZE : 2.5sq
3. 제어용 전선 : 2.5mm KIV,HIV
4. 제작시 다소 변경 될수있음.
5. 외함 개방구조는 다음과 같을것.
   1) 외함 개방시 충전부분이 차단되도록 할것.
   2) 외함 개방후 충전되어있는 부분은 IP2X 이상의 직접 접촉 방호가 되어있을것.

N O T E

1. UPPER LIMIT LS-1의 접점 허용 전류 용량. : AC 600V, 3A
2. UPPER LIMIT LS-2의 접점 허용 전류 용량. : NFB 125AF
3. EARTH TERMINAL RESISTANCE : 0.018
4. POWER SOURCE : AC. 3ø 460V 60HZ

| REV | DATE | DESCRIPTION | DRAWN | CHECK | APPRVD |
|---|---|---|---|---|---|
| A | 05.AUG.2016 | REDRAWING | K.H.Han | - | - |

TITLE: EARTH DETAILS DRAWING
KDC40/5-MA

CUSTOMER

극동호이스트 주식회사
KUKDONG HOIST CO., LTD.

| DESIGN | SCALE | SHT. NO. | ORDER NO. |
|---|---|---|---|
| | | | |

DWG. NO. KDC40-BA05

본 도면은 제작 및 배포금지

| NO | DESCRIPTION | MATERIAL | Q'TY | SIZE | REMARK |
|---|---|---|---|---|---|
| - | - | - | - | - | |
| | | | | | |
| | | | | | |

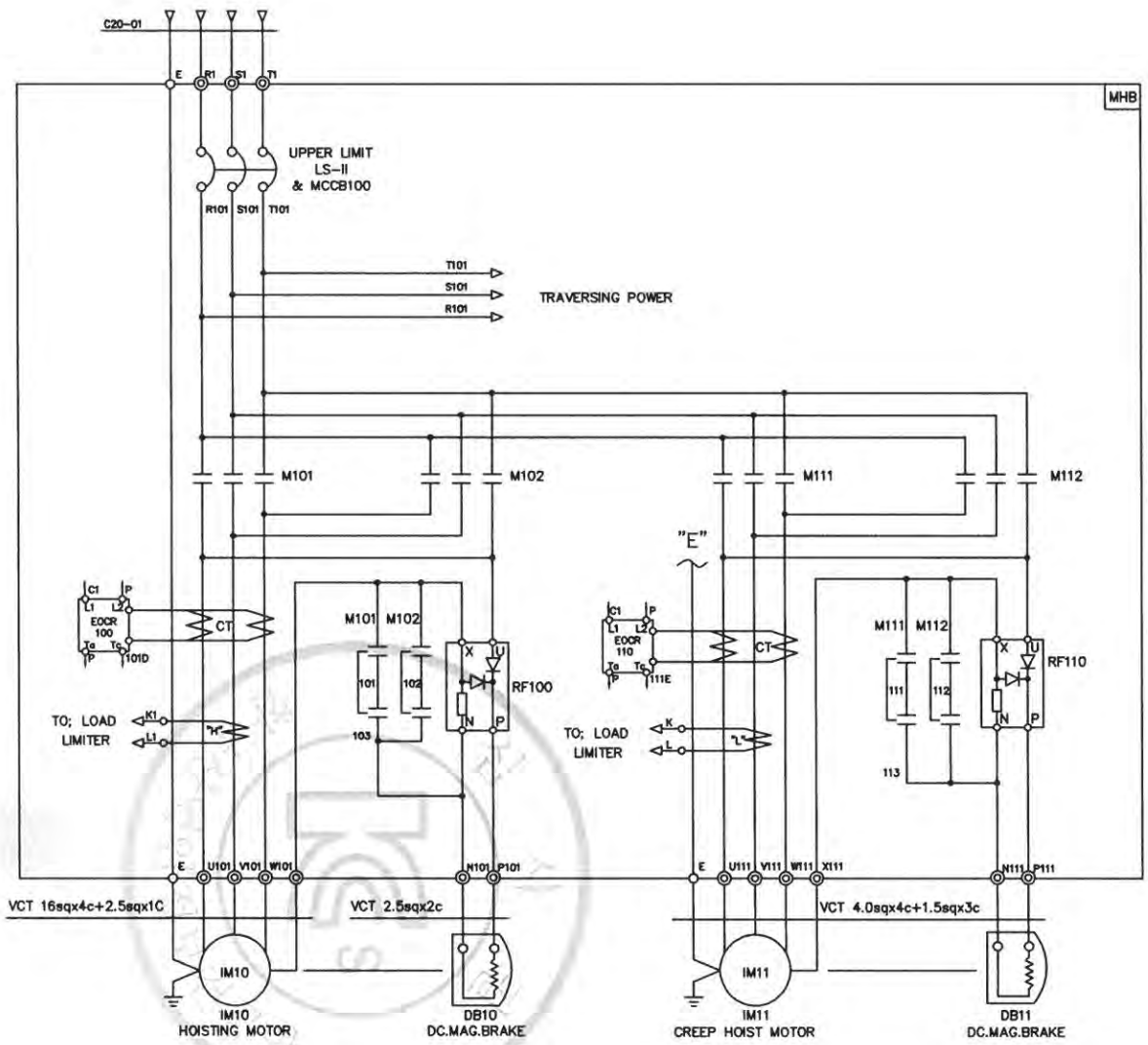


| REV | DATE | DESCRIPTION | DRAWN | CHECK | APPRVD |
|---|---|---|---|---|---|
| 0 | 01.JUNE.2017 | FIRST ISSUE | H.S.KIM | - | M.H.KIM |

PROJECT

CLIENT

MANUFACTURER: 극동호이스트 주식회사 KUKDONG HOIST CO., LTD.

TITLE: 40T-CREEP HOISTING POWER CIRCUIT DIAGRAM KDC40

| SCALE | DWG. NO. | SHT. NO. | REV. |
|---|---|---|---|
| - | KDC40E52 | - | - |

| SPECIFICATION / SYMBOLS / DESCRIPTION | HOISTING POWER | HOISTING MOTOR | CREEP MOTOR | DC.MAG' BRAKE | NO FUSE BREAKER | MAGNET CONTACTOR | | ELECTRIC OVER CURRENT RELAY | | SILICON RECTIFIER | | LOAD LIMITER | CABLE |
|---|---|---|---|---|---|---|---|---|---|---|---|---|---|
| | HOIST | IM10 | IM11 | DB10, 11 | LS-II & MCCB100 | M101,M102 | M111,M112 | EOCR100 | EOCR110 | RF100 | RF110 | LOAD LIMITER | C20-01 |
| | 40TON AC 3PH 460V 60Hz | 33KW x 6P | 3.7KWx4P | DC 100V | ABS125AF/100AT | MC-185a | DMC22b | SS-100 | SS-30 | SR-60 | SR-30 | JDL-100 | VCT 25sqx4c |
| SELECTION MAKER | KUKDONG | | | | LS | | DONG-A | SCHNEIDER/ASAN | | ASAN | | JUNGHO | DAEDUCK |

무단복제 및 배포금지

| NO | DESCRIPTION | MATERIAL | Q'TY | SIZE | REMARK |
|---|---|---|---|---|---|
| - | - | - | - | - | |

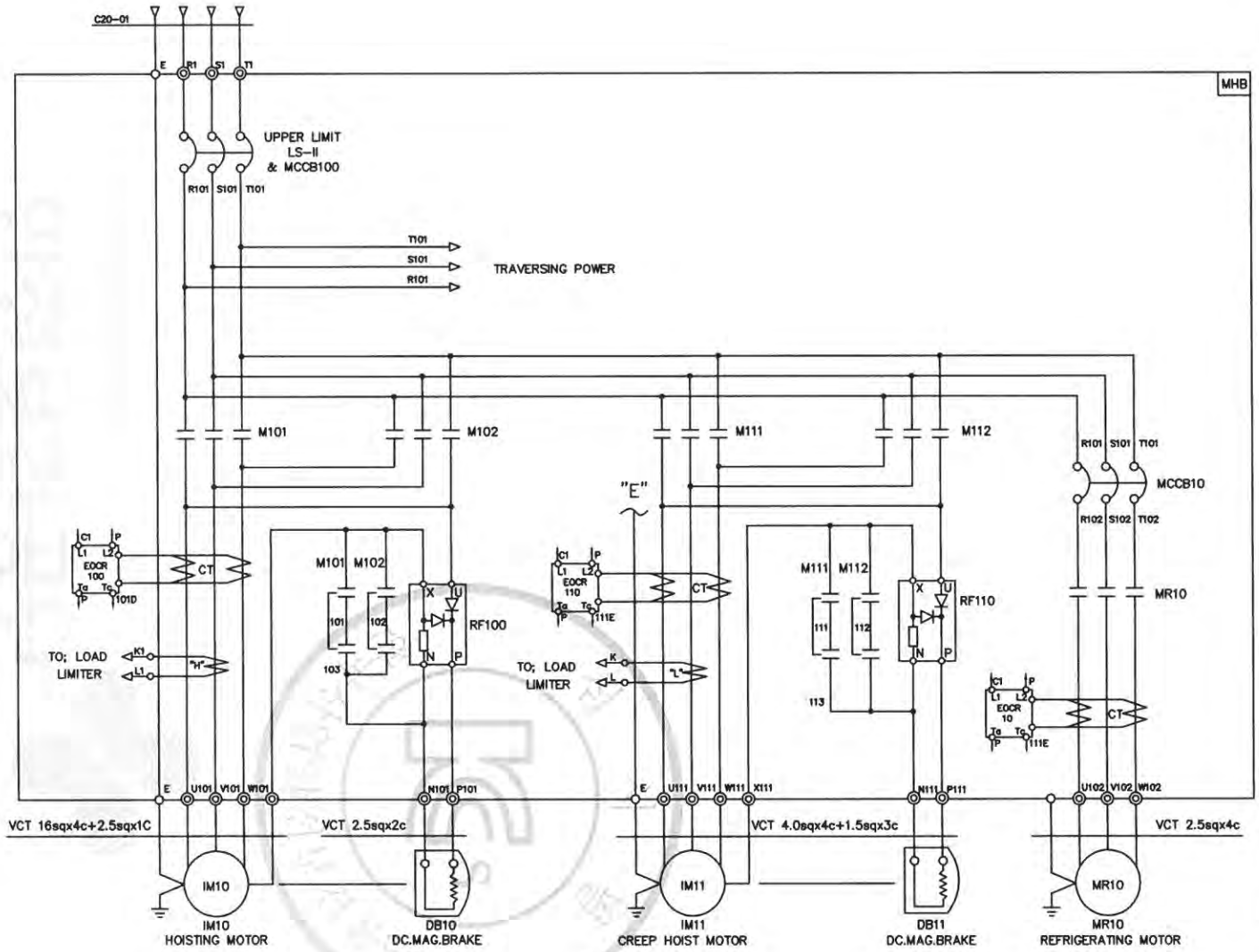


| REV | DATE | DESCRIPTION | DRAWN | CHECK | APPRVD |
|---|---|---|---|---|---|
| 0 | 01.JUNE.2017 | FIRST ISSUE | H.S.KIM | - | M.H.KIM |

PROJECT

CLIENT

MANUFACTURER

극동호이스트 주식회사
KUKDONG HOIST CO., LTD.

TITLE 40T-CREEP HOISTING POWER CIRCUIT DIAGRAM
KDC40 (With REFRIGERATING MOTOR)

| SCALE | DWG. NO. | SHT. NO. | REV. |
|---|---|---|---|
| - | KDC40E53 | - | - |

| SPECIFICATION | HOISTING POWER | HOISTING MOTOR | CREEP MOTOR | REFRIGERATING MOTOR | DC.MAG' BRAKE | NO FUSE BREAKER | | MAGNET CONTACTOR | | | ELECTRIC OVER CURRENT RELAY | | | SILICON RECTIFIER | | LOAD LIMITER | CABLE |
|---|---|---|---|---|---|---|---|---|---|---|---|---|---|---|---|---|---|
| SYMBOLS DESCRIPTION | HOIST | IM10 | IM11 | MR10 | DB10, 11 | LS-II & MCCB100 | MCCB10 | M101,M102 | M111,M112 | MR10 | EOCR100 | EOCR110 | EOCR10 | RF100 | RF110 | LOAD LIMITER | C20-01 |
| | 40TON AC 3PH 460V 60Hz | 33KW x 6P | 3.7KWx4P | 0.4KWx4P | DC 100V | ABS125AF/100AT | ABS30AF/5AT | MC-185a | DMC22b | DMC12b | SS-100 | SS-30 | SS-05 | SR-60 | SR-30 | JDL-100 | VCT 25sqx4c |
| SELECTION MAKER | KUKDONG | | | | | LS | | | DONG-A | | SCHNEIDER/ASAN | | | ASAN | | JUNGHO | DAEDUCK |

무단배포금지

| NO | DESCRIPTION | MATERIAL | Q'TY | SIZE | REMARK |
|---|---|---|---|---|---|
| - | - | - | - | - | |
| | | | | | |
| | | | | | |

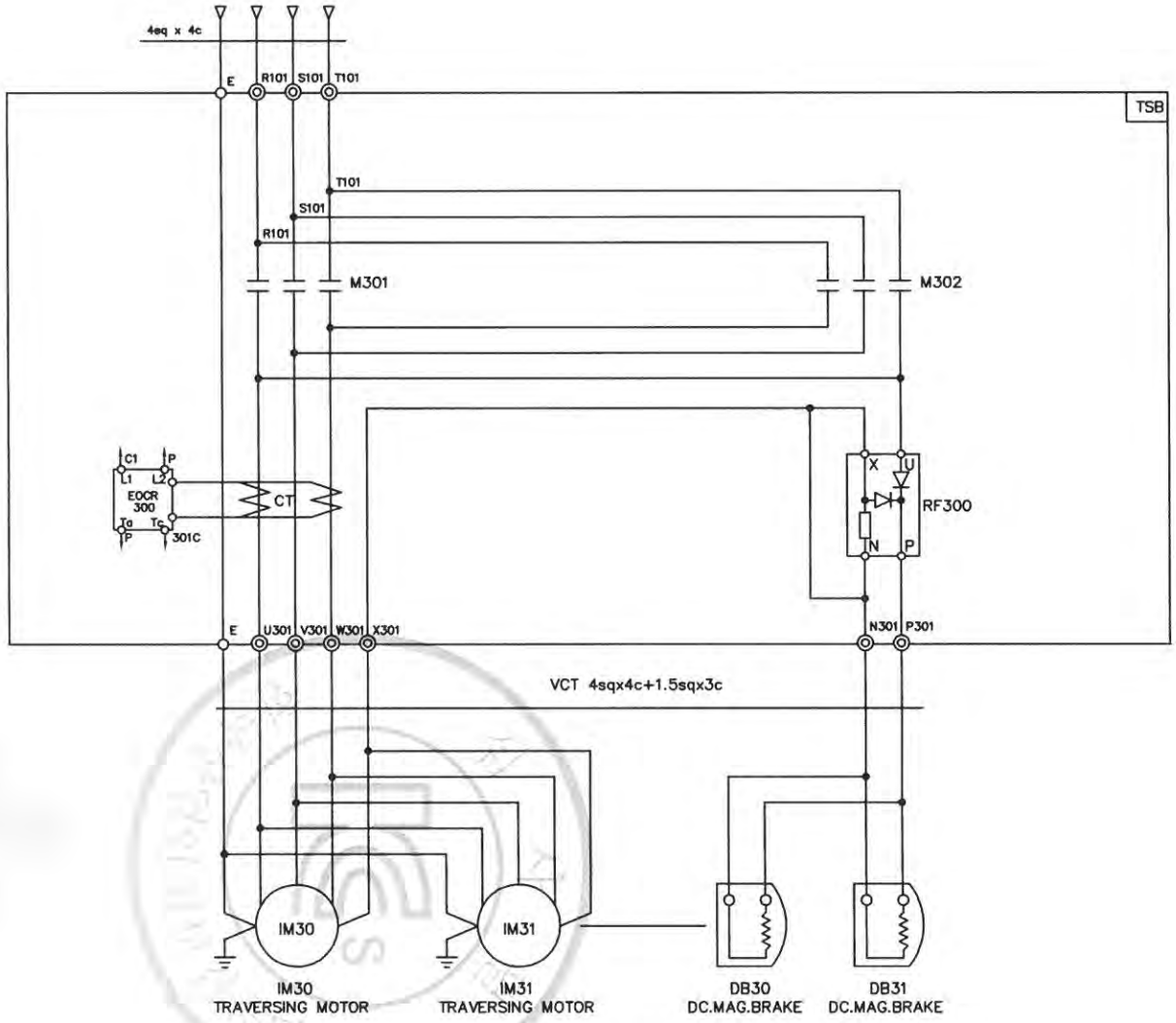


| SPECIFICATION / SYMBOLS / DESCRIPTION | TRAVERSING POWER | TRAVERSING MOTOR | DC.MAG' BRAKE | MAGNET CONTACTOR | ELECTRIC OVER CURRENT RELAY | SILICON RECTIFIER |
|---|---|---|---|---|---|---|
| | | IM 30, IM31 | DB30, DB31 | M301,M302 | EOCR300 | RF00 |
| | AC 3PH 460V 60Hz | 2.2kW x 4P | DC 100V | DMC40b | SS-30 | SR-30 |
| | AC 3PH 460V 60Hz | 1.5kW x 6P | DC 100V | DMC40b | SS-30 | SR-30 |
| SELECTION MAKER | KUKDONG | | | DONG-A | SCHNEIDER/ASAN | ASAN |

| REV | DATE | DESCRIPTION | DRAWN | CHECK | APPRVD |
|---|---|---|---|---|---|
| 0 | 01.JUNE.2017 | FIRST ISSUE | H.S.KIM | - | M.H.KIM |

PROJECT

CLIENT

MANUFACTURER: 극동호이스트 주식회사 KUKDONG HOIST CO., LTD.

TITLE: TRAVERSING POWER CIRCUIT DIAGRAM KDC40/5-MA

| SCALE | DWG. NO. | SHT. NO. | REV. |
|---|---|---|---|
| - | KDC405E54 | - | - |

무단배포금지

| 1 | 2 | 3 | 4 | 5 | 6 | 7 | 8 | 9 | 10 | 11 | 12 | 13 | 14 | 15 | 16 | 17 | 18 | 19 | 20 |
|---|---|---|---|---|---|---|---|---|---|---|---|---|---|---|---|---|---|---|---|

ADR'S NO.

REFRIGERATING 구현 시 적용

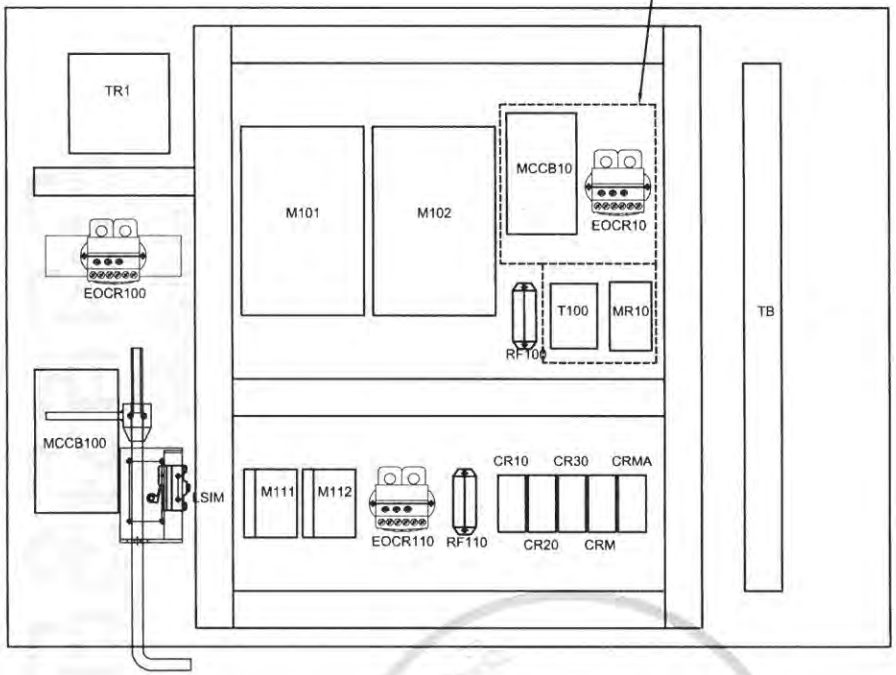


| NO | SYMBOL | DESCRIPTION | SPECIFICATION | Q'TY | REMARK |
|---|---|---|---|---|---|
| 1 | MCCB100 | NO FUSE BREAKER | ABS125AF/100AT | 1 | |
| 2 | TR1 | TRANS | 480/110,120V 300VA | 1 | |
| 3 | M101,102 | MAGNET CONTACT | MC-185a | 2 | HOISTING |
| 4 | EOCR100 | E.O.C.R | SS-100 | 1 | HOISTING |
| 5 | RF100 | SILICON RECTIFIER | SR-60 | 1 | HOISTING |
| 6 | M111,112 | MAGNET CONTACT | DMC22b | 2 | CREEP |
| 7 | EOCR110 | E.O.C.R | SS-30 | 1 | CREEP |
| 8 | RF110 | SILICON RECTIFIER | SR-30 | 1 | CREEP |
| 9 | MCCB10 | NO FUSE BREAKER | ABS30AF/5AT | 1 | REFRIGERATING |
| 10 | EOCR10 | E.O.C.R | SS-05 | 1 | REFRIGERATING |
| 11 | T100 | TIMER | AT11DN | 1 | REFRIGERATING |
| 12 | MR10 | MAGNET CONTACT | DMC12b | 1 | REFRIGERATING |
| 13 | CR10,20,30,CR,,CRMA | RELAY | MINI, 4C | 4 | SELECT |
| 14 | TB | TERMINAL BLOCK | 100A,25A,15A | | |
| 15 | LSIM | UPPER LIMIT | HY-R704A | 1 | |

NOTE

1. 전선의 색상은 다음과 같다.
   1) 흑색 : 교류 및 직류 전원회로
   2) 적색 : 교류 제어회로
   3) 청색 : 직류 제어회로
   4) 주황색 : 외부 연동장치 제어회로
   5) 녹색 또는 녹색과 황색 조합 : 접지
   6) 청색 : 중성선
2. CABLE MATERIAL : KIV OR EQUIVALENT
   MIN SIZE : 2.5sq
3. 제어용 전선 : 2.5mm KIV,HIV
4. 제작시 다소 변경 될수있음.
5. 외함 개방구조는 다음과 같을것.
   1) 외함 개방시 충전부분이 차단되도록 할것.
   2) 외함 개방후 충전되어있는 부분은 IP2X 이상의 직접 접촉 방호가 되어있을것.

NOTE

1. UPPER LIMIT LS-1의 접점 허용 전류 용량. : AC 600V, 3A
2. UPPER LIMIT LS-2의 접점 허용 전류 용량. : NFB 125AF
3. EARTH TERMINAL RESISTANCE : 0.018
4. POWER SOURCE : AC. 3ø 480V 60HZ

| REV | DATE | DESCRIPTION | DRAWN | CHECK | APPRVD |
|---|---|---|---|---|---|
| A | 05.AUG.2016 | REDRAWING | K.H.Han | - | - |

TITLE: EARTH DETAILS DRAWING
KDC40/5-MA

CUSTOMER

극동호이스트 주식회사
KUKDONG HOIST CO., LTD.

| DESIGN | SCALE | SHT. NO. | ORDER NO. |
|---|---|---|---|
| | | | |

DWG. NO. KDC40-BA06

불법복제 및 배포금지

| NO | DESCRIPTION | MATERIAL | Q'TY | SIZE | REMARK |
|---|---|---|---|---|---|
| - | - | - | - | - | |
| | | | | | |
| | | | | | |

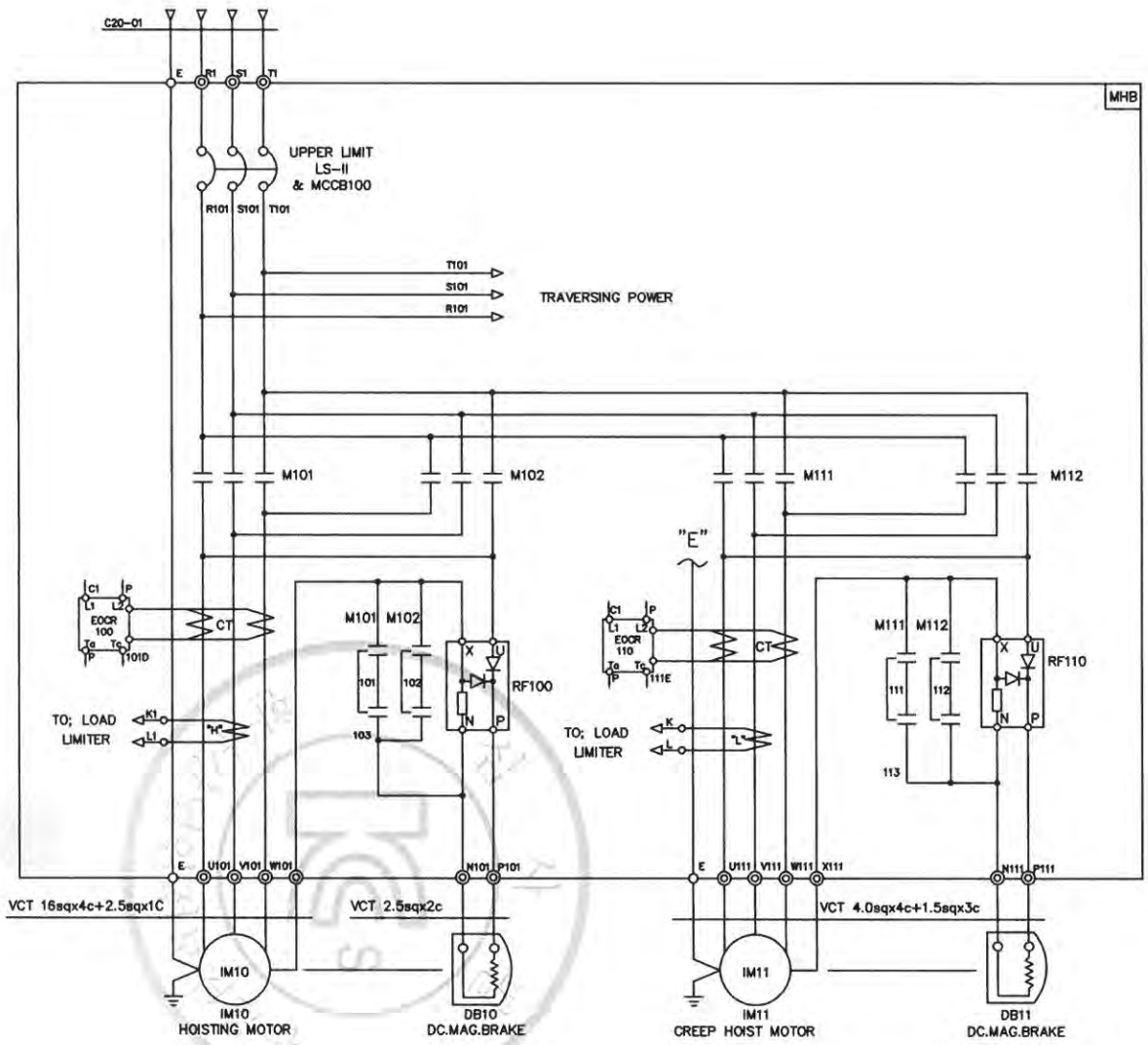


| SPECIFICATION | HOISTING POWER | HOISTING MOTOR | CREEP MOTOR | DC.MAG' BRAKE | NO FUSE BREAKER | MAGNET CONTACTOR | | ELECTRIC OVER CURRENT RELAY | | SILICON RECTIFIER | | LOAD LIMITER | CABLE |
|---|---|---|---|---|---|---|---|---|---|---|---|---|---|
| SYMBOLS / DESCRIPTION | HOIST | IM10 | IM11 | DB10, 11 | LS-II & MCCB100 | M101,M102 | M111,M112 | EOCR100 | EOCR110 | RF100 | RF110 | LOAD LIMITER | C20-01 |
| | 40TON AC 3PH 480V 60Hz | 33KW x 6P | 3.7KWx4P | DC 100V | ABS125AF/100AT | MC-185a | DMC22b | SS-100 | SS-30 | SR-60 | SR-30 | JDL-100 | VCT 25sqx4c |
| SELECTION MAKER | KUKDONG | | | | LS | | DONG-A | SCHNEIDER/ASAN | | ASAN | | JUNGHO | DAEDUCK |

| REV | DATE | DESCRIPTION | DRAWN | CHECK | APPRVD |
|---|---|---|---|---|---|
| 0 | 01.JUNE.2017 | FIRST ISSUE | H.S.KIM | - | M.H.KIM |

PROJECT

CLIENT

MANUFACTURER: 극동호이스트 주식회사 KUKDONG HOIST CO., LTD.

TITLE: 40T-CREEP HOISTING POWER CIRCUIT DIAGRAM KDC40

| SCALE | DWG. NO. | SHT. NO. | REV. |
|---|---|---|---|
| - | KDC40E62 | - | - |

무단배포금지

| NO | DESCRIPTION | MATERIAL | Q'TY | SIZE | REMARK |
|---|---|---|---|---|---|
| - | - | - | - | - | |

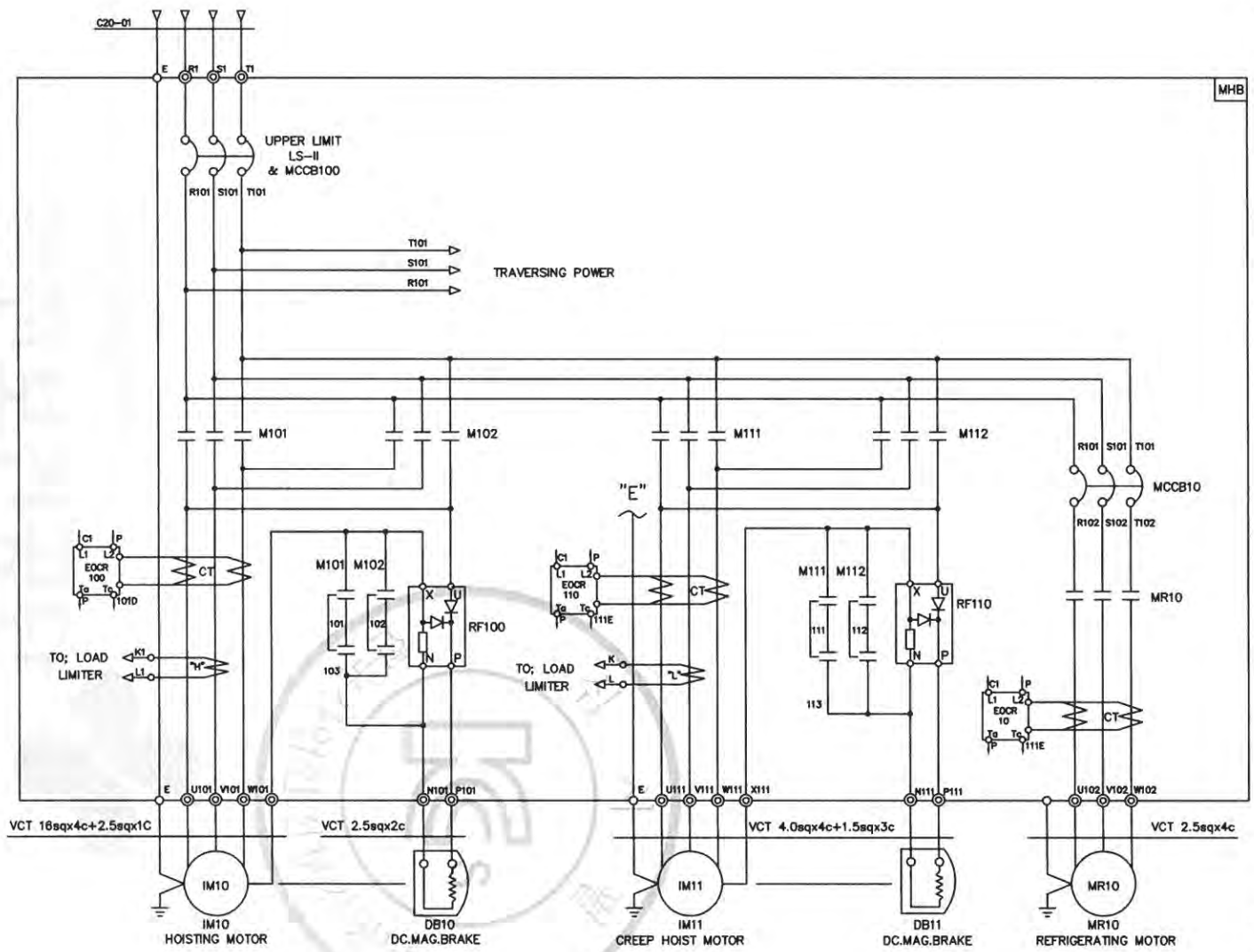


| SPECIFICATION / SYMBOLS / DESCRIPTION | HOISTING POWER | HOISTING MOTOR | CREEP MOTOR | REFRIGERATING MOTOR | DC.MAG' BRAKE | NO FUSE BREAKER | | MAGNET CONTACTOR | | | ELECTRIC OVER CURRENT RELAY | | | SILICON RECTIFIER | | LOAD LIMITER | CABLE |
|---|---|---|---|---|---|---|---|---|---|---|---|---|---|---|---|---|---|
| | HOIST | IM10 | IM11 | MR10 | DB10, 11 | LS-II & MCCB100 | MCCB10 | M101,M102 | M111,M112 | MR10 | EOCR100 | EOCR110 | EOCR10 | RF100 | RF110 | LOAD LIMITER | C20-01 |
| | 40TON AC 3PH 480V 60Hz | 33KW x 6P | 3.7KWx4P | 0.4KWx4P | DC 100V | ABS125AF/100AT | ABS30AF/5AT | MC-185a | DMC22b | DMC12b | SS-100 | SS-30 | SS-05 | SR-60 | SR-30 | JDL-100 | VCT 25sqx4c |
| SELECTION / MAKER | KUKDONG | | | | | LS | | | DONG-A | | SCHNEIDER/ASAN | | | ASAN | | JUNGHO | DAEDUCK |

| REV | DATE | DESCRIPTION | DRAWN | CHECK | APPRVD |
|---|---|---|---|---|---|
| 0 | 01.JUNE.2017 | FIRST ISSUE | H.S.KIM | - | M.H.KIM |

PROJECT

CLIENT

MANUFACTURER: 극동호이스트 주식회사 KUKDONG HOIST CO., LTD.

TITLE: 40T-CREEP HOISTING POWER CIRCUIT DIAGRAM KDC40 (With REFRIGERATING MOTOR)

| SCALE | DWG. NO. | SHT. NO. | REV. |
|---|---|---|---|
| - | KDC40E63 | - | - |

불법복제 및 배포금지

| NO | DESCRIPTION | MATERIAL | Q'TY | SIZE | REMARK |
|---|---|---|---|---|---|
| - | - | - | - | - | |
| | | | | | |
| | | | | | |

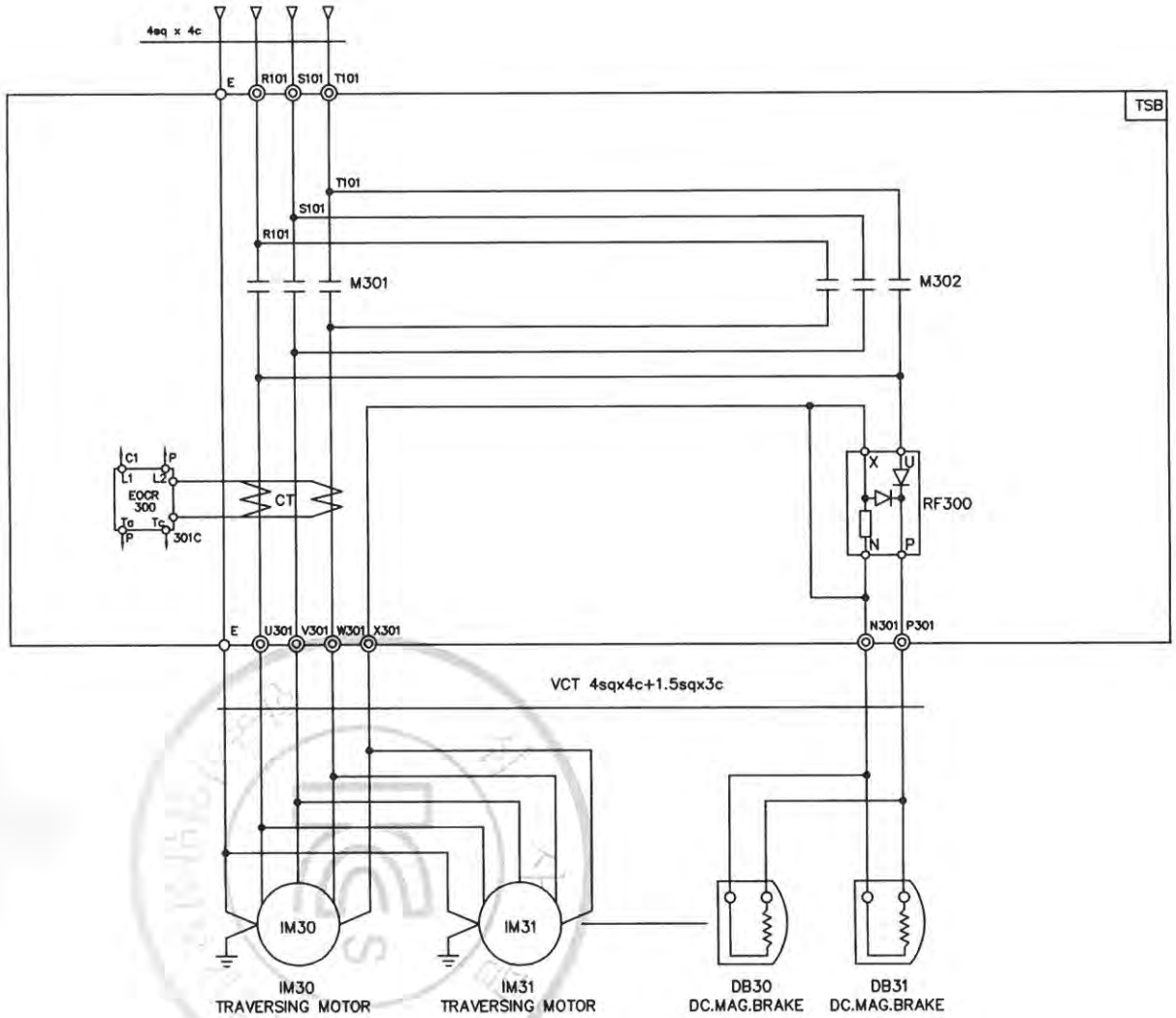


| SPECIFICATION / SYMBOLS / DESCRIPTION | TRAVERSING POWER | TRAVERSING MOTOR | DC.MAG' BRAKE | MAGNET CONTACTOR | ELECTRIC OVER CURRENT RELAY | SILICON RECTIFIER |
|---|---|---|---|---|---|---|
| | | IM 30, IM31 | DB30, DB31 | M301,M302 | EOCR300 | RF00 |
| | AC 3PH 480V 60Hz | 2.2kW x 4P | DC 100V | DMC40b | SS-30 | SR-30 |
| | AC 3PH 480V 60Hz | 1.5kW x 6P | DC 100V | DMC40b | SS-30 | SR-30 |
| SELECTION MAKER | KUKDONG | | | DONG-A | SCHNEIDER/ASAN | ASAN |

| REV | DATE | DESCRIPTION | DRAWN | CHECK | APPRVD |
|---|---|---|---|---|---|
| 0 | 01.JUNE.2017 | FIRST ISSUE | H.S.KIM | - | M.H.KIM |

PROJECT

CLIENT

MANUFACTURER: 극동호이스트 주식회사 KUKDONG HOIST CO., LTD.

TITLE: TRAVERSING POWER CIRCUIT DIAGRAM KDC40/5-MA

| SCALE | DWG. NO. | SHT. NO. | REV. |
|---|---|---|---|
| - | KDC405E64 | - | - |

불법복제 및 배포금지

| NO | DESCRIPTION | MATERIAL | Q'TY | SIZE | REMARK |
|---|---|---|---|---|---|
| - | - | - | - | - | |
| | | | | | |
| | | | | | |

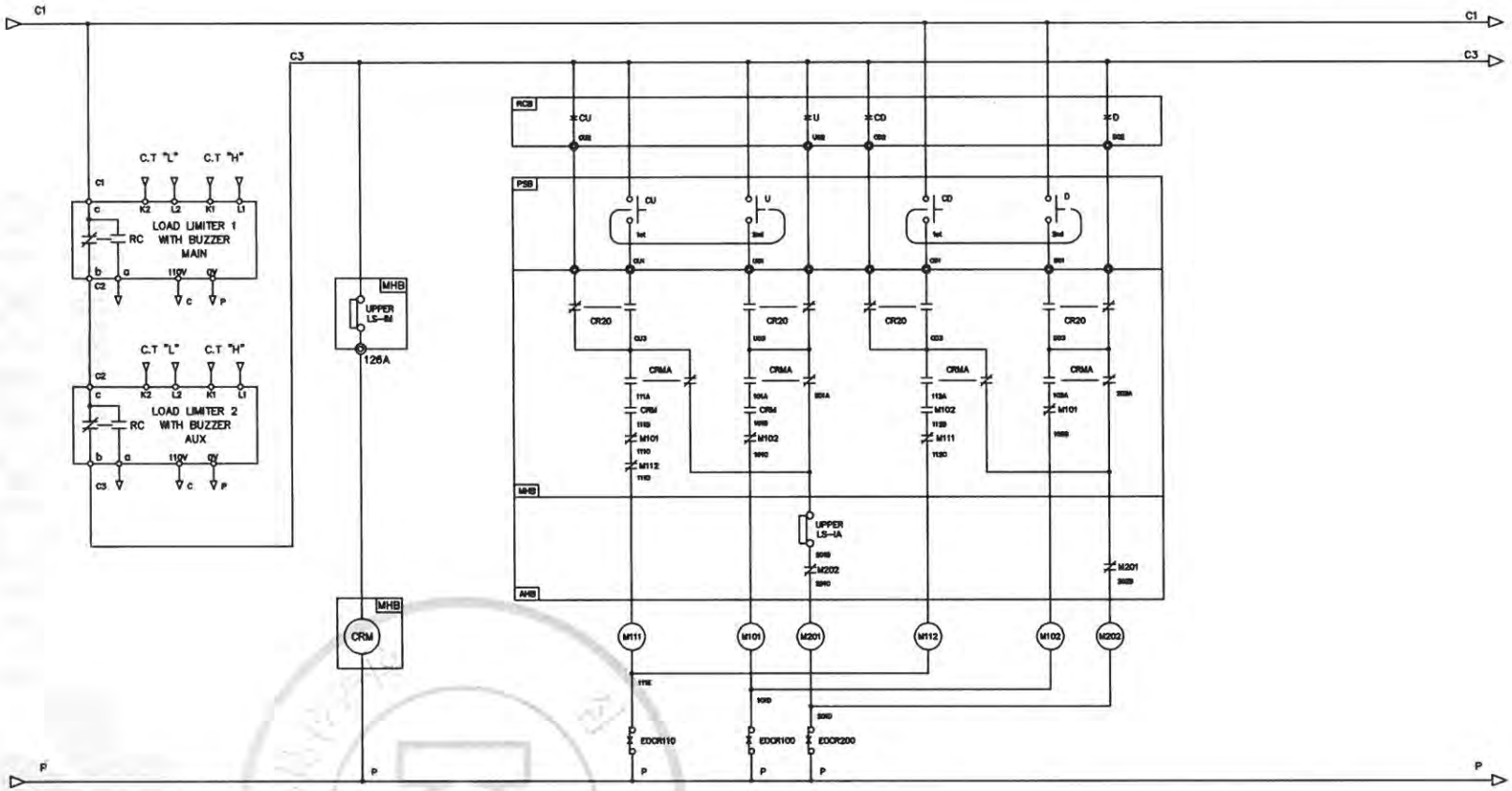


* KDC40/5(C) 모델에서 AUX의 MAGNET CONTACTORE는 아래 표와 같이 SYMBOL을 변경 적용한다.

| NO | DESCRIPTION | KD(C)5의 SYMBOL | KDC40/5(C)에서 변경 적용된 SYMBOL |
|---|---|---|---|
| 1 | MAGNET CONTACT | M101 | M201 |
| 2 | MAGNET CONTACT | M102 | M202 |
| 3 | MAGNET CONTACT | M111 | M211 |
| 4 | MAGNET CONTACT | M112 | M212 |

| REV | DATE | DESCRIPTION | DRAWN | CHECK | APPRVD |
|---|---|---|---|---|---|
| 0 | 01.JUNE.2017 | FIRST ISSUE | H.S.KIM | - | M.H.KIM |

PROJECT

CLIENT

MANUFACTURER: 극동호이스트 주식회사 KUKDONG HOIST CO., LTD.

TITLE: HOISTING CONTROL CIRCUIT DIAGRAM
KDC40/5-MA (40T-Creep, 5T-Single)

| SCALE | DWG. NO. | SHT. NO. | REV. |
|---|---|---|---|
| - | KDC405E105 | - | - |

| SPECIFICATION | TIMER | UPPER LIMIT SWITCH | UPPER LIMIT SWITCH | CONTROL RELAY | PENDANT P.B.S/W | REMOTE CONTROL | LOAD LIMITER 1,2 |
|---|---|---|---|---|---|---|---|
| SYMBOL | T100 | LS-IM | LS-IA | CR10, CRMA, CRM | PSB | RCB | LOAD LIMITER |
| | AT11DN | HY-R704A | AC 600V 3A | MINI, 4C | KG-H10EMMHCAA | | JDL-100 |
| MAKER | AUTONICS | HAN YOUNG | KUK DONG | | KG AUTO | KG AUTO | JEONG HO |

무단배포금지

| NO | DESCRIPTION | MATERIAL | Q'TY | SIZE | REMARK |
|---|---|---|---|---|---|
| - | - | - | - | - | |

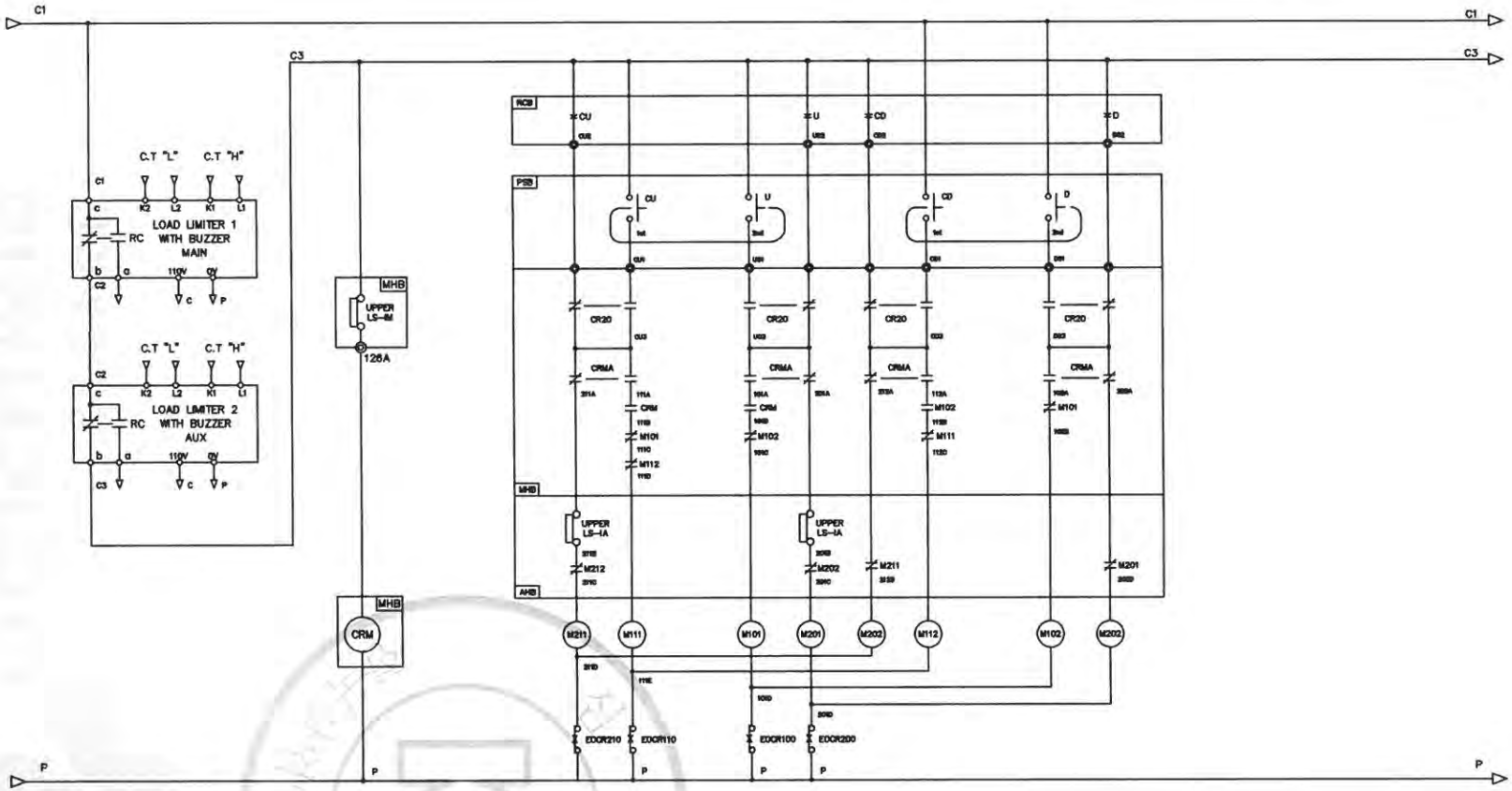


* KDC40/5(C) 모델에서 AUX의 MAGNET CONTACTORE 아래 표와 같이 SYMBOL을 변경 적용한다.

| NO | DESCRIPTION | KD(C)5의 SYMBOL | KDC40/5(C)에서 변경 적용된 SYMBOL |
|---|---|---|---|
| 1 | MAGNET CONTACT | M101 | M201 |
| 2 | MAGNET CONTACT | M102 | M202 |
| 3 | MAGNET CONTACT | M111 | M211 |
| 4 | MAGNET CONTACT | M112 | M212 |

| SPECIFICATION | TIMER | UPPER LIMIT SWITCH | UPPER LIMIT SWITCH | CONTROL RELAY | PENDANT P.B.S/W | REMOTE CONTROL | LOAD LIMITER 1,2 |
|---|---|---|---|---|---|---|---|
| SYMBOL | T100 | LS-IM | LS-IA | CR10, CRMA, CRM | PSB | RCB | LOAD LIMITER |
| | AT11DN | HY-R704A | AC 600V 3A | MINI, 4C | KG-H10EMMHCAA | | JDL-100 |
| MAKER | AUTONICS | HAN YOUNG | KUK DONG | | KG AUTO | KG AUTO | JEONG HO |

| REV | DATE | DESCRIPTION | DRAWN | CHECK | APPRVD |
|---|---|---|---|---|---|
| 0 | 01.JUNE.2017 | FIRST ISSUE | H.S.KIM | - | M.H.KIM |

PROJECT

CLIENT

MANUFACTURER: 극동호이스트 주식회사 KUKDONG HOIST CO., LTD.

TITLE: HOISTING CONTROL CIRCUIT DIAGRAM
KDC40/5C-MA (40T-Creep, 5T-Creep)

| SCALE | DWG. NO. | SHT. NO. | REV. |
|---|---|---|---|
| - | KDC405E106 | - | - |

불법복제 및 배포금지

| NO | DESCRIPTION | MATERIAL | Q'TY | SIZE | REMARK |
|---|---|---|---|---|---|
| - | - | - | - | - | |
| | | | | | |
| | | | | | |

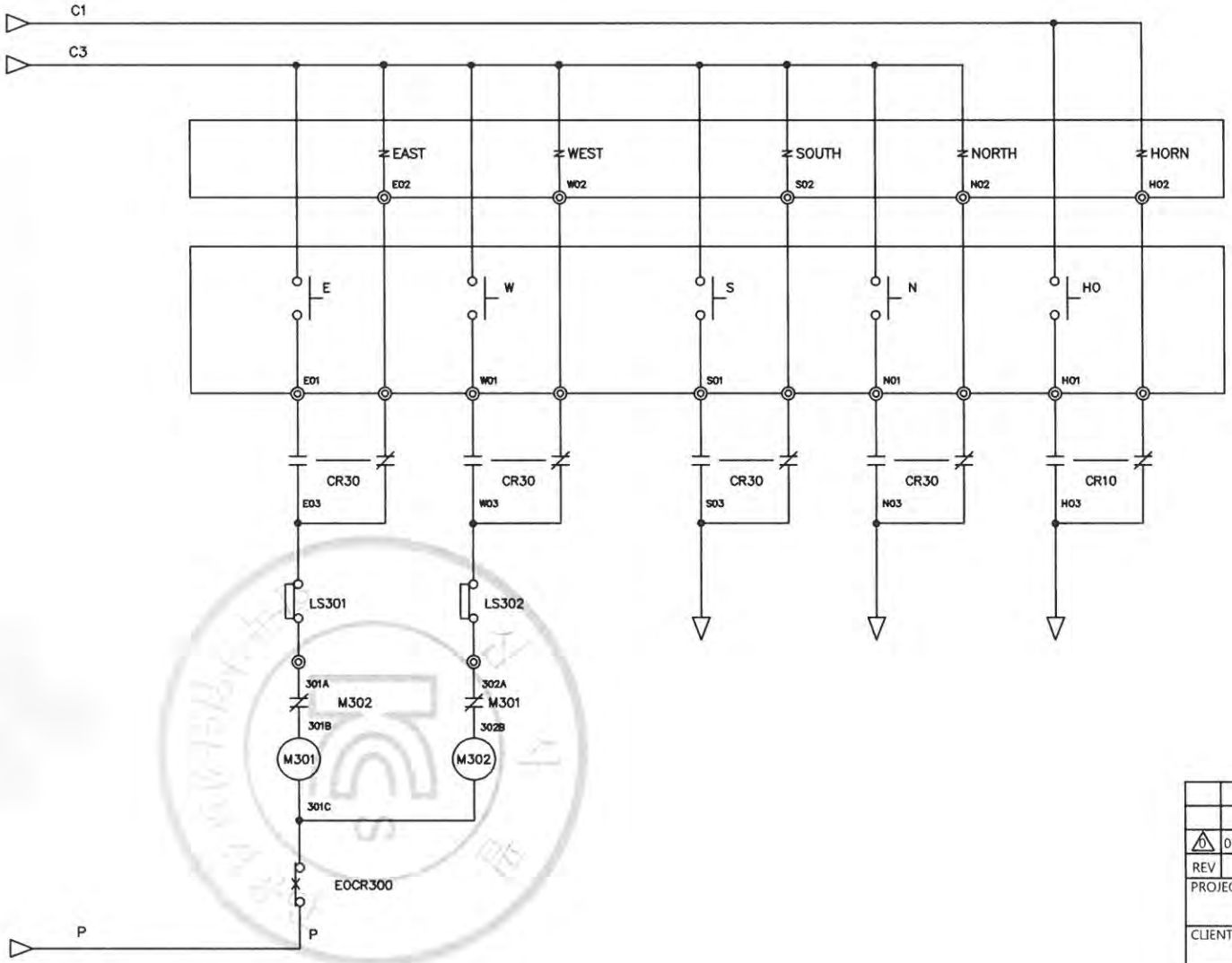


| SPECIFICATION | LIMIT SWITCH |
|---|---|
| SYMBOL | LS301,302 |
| | KG-L001 |
| MAKER | KG AUTO |

| REV | DATE | DESCRIPTION | DRAWN | CHECK | APPRVD |
|---|---|---|---|---|---|
| 0 | 01.JUNE.2017 | FIRST ISSUE | H.S.KIM | - | M.H.KIM |

PROJECT

CLIENT

MANUFACTURER: 극동호이스트 주식회사 KUKDONG HOIST CO., LTD.

TITLE: TRAVERSING & TRAVELLING CONTROL CIRCUIT DIAGRAM KDC40/5-MA

| SCALE | DWG. NO. | SHT. NO. | REV. |
|---|---|---|---|
| - | KDC405E108 | - | - |

무단배포금지

| NO | DESCRIPTION | MATERIAL | Q'TY | SIZE | REMARK |
|---|---|---|---|---|---|
| - | - | - | - | - | |
| | | | | | |
| | | | | | |

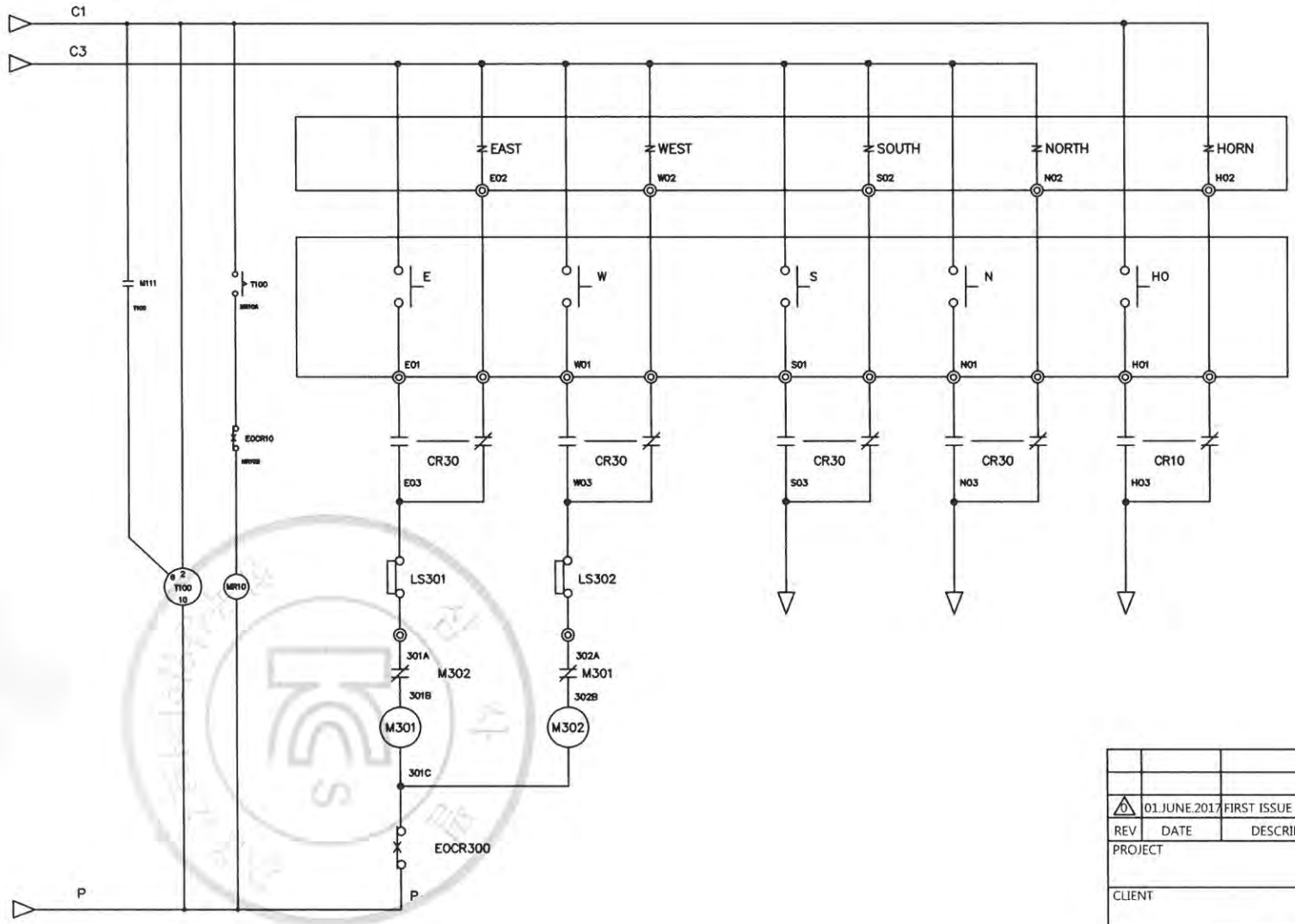


| SPECIFICATION | TIMER | LIMIT SWITCH |
|---|---|---|
| SYMBOL | T100 | LS301,302 |
| | AT11DN | KG-L001 |
| MAKER | AUTONICS | KG AUTO |

| REV | DATE | DESCRIPTION | DRAWN | CHECK | APPRVD |
|---|---|---|---|---|---|
| 0 | 01.JUNE.2017 | FIRST ISSUE | H.S.KIM | - | M.H.KIM |

PROJECT

CLIENT

MANUFACTURER

극동호이스트 주식회사
KUKDONG HOIST CO., LTD.

TITLE TRAVERSING & TRAVELLING CONTROL CIRCUIT DIAGRAM
KDC40/5-MA

| SCALE | DWG. NO. | SHT. NO. | REV. |
|---|---|---|---|
| - | KDC405E107 | - | - |

무단배포 및 복제 금지

| NO | DESCRIPTION | MATERIAL | Q'TY | SIZE | REMARK |
|---|---|---|---|---|---|
| - | - | - | - | - | |
| | | | | | |
| | | | | | |

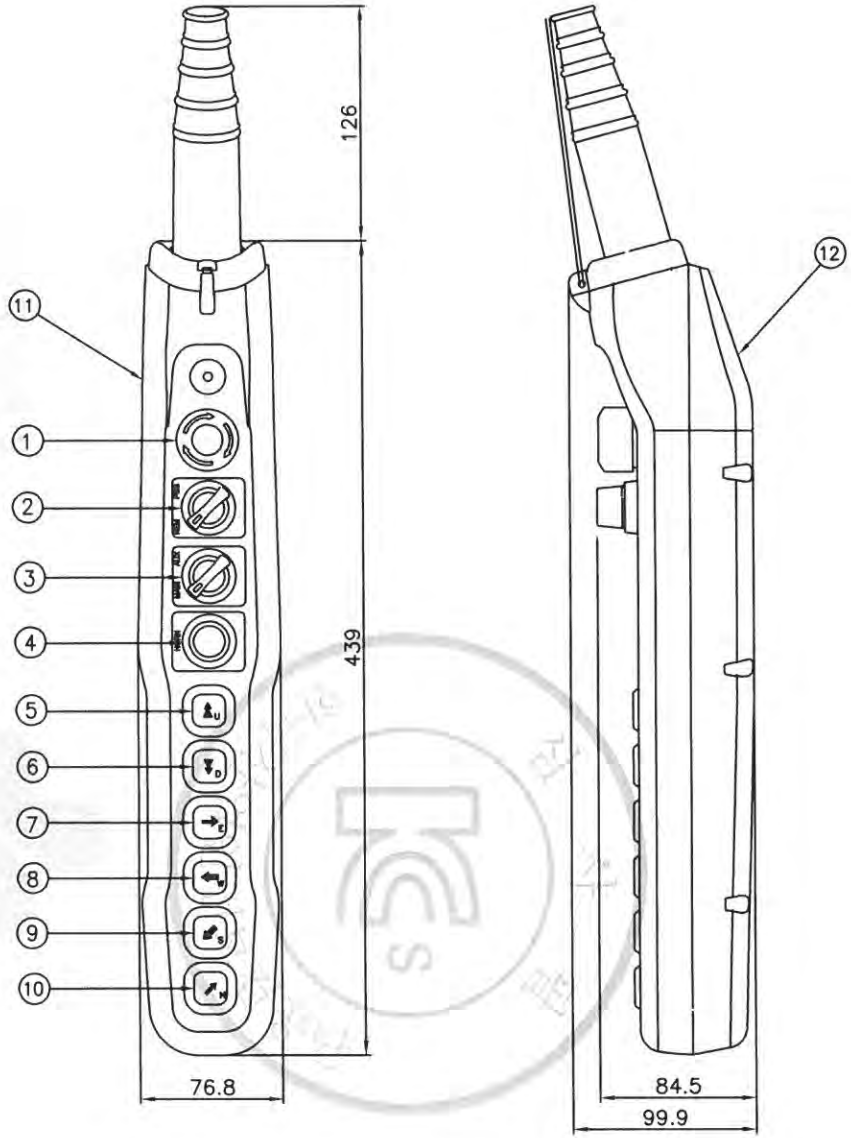


| No | NAME | DESCRIPTION |
|---|---|---|
| 1 | EBS | EMERGENCY STOP |
| 2 | REM-PBS | REMOTE-PENDANT PBS (2STEP) |
| 3 | MAIN-AUX | MAIN-AUX (2STEP) |
| 4 | HO | HORN |
| 5 | U | UP (2STEP) |
| 6 | D | DOWN (2STEP) |
| 7 | E | EAST (1STEP) |
| 8 | W | WEST (1STEP) |
| 9 | S | SOUTH (1STEP) |
| 10 | N | NORTH (1STEP) |
| 11 | PUSH BUTTON CASE | |
| 12 | PUSH BUTTON COVER | |

* NOTE

1. MATERIAL : ABS
2. COLOR : YELLOW
3. CONTACTOR : AC 250V 6A
4. CABLE : VCT 1.5sq
5. IP65

| REV | DATE | DESCRIPTION | DRAWN | CHECK | APPRVD |
|---|---|---|---|---|---|
| 0 | 01.JUNE.2017 | FIRST ISSUE | H.S.KIM | - | M.H.KIM |

PROJECT

CLIENT

MANUFACTURER: 극동호이스트 주식회사 KUKDONG HOIST CO., LTD.

TITLE: PENDANT PUSH BUTTON SWITCH - LAY OUT
KG-H10EMMHCAA

| SCALE | DWG. NO. | SHT. NO. | REV. |
|---|---|---|---|
| - | KDC405E102 | - | - |

본 도면은 배포 및 제작 금지

불법복제 및 배포금지

# Ⅳ. 참고자료

심사필
KCS
한국산업안전보건공단

불법복제 및 배포금지

KISWIRE
5, Sandan 6-ro, Jeonggwan-myeon, Gijang-gun, Busan, 46026, Korea
TEL:+82-51-727-0015 FAX:+82-51-727-3247 www.kiswire.com

CERT NO. 201412WRW02000 DATE *Jun. 08, 2017*

# MILL TEST CERTIFICATE

**THIS IS TO CERTIFY THAT THE MATERIAL DESCRIBED BELOW WAS MANUFACTURED IN ACCORDANCE WITH KISWIRE LTD SPECIFICATION AND APPLICABLE SECTIONS OF** KSD 3514 - 2002 ( B Grade )

TO MESSRS

MATERIAL DESCRIPTION UNGALVANIZED STEEL WIRE ROPE

06 X 25 (FI) + IWRC 1000 M X 1 REEL

EX NO. 1W6790

ORDER NO. REEL NO. 1 SAMPLING NO. 1

DIAMETER OF ROPE 28.000 mm TYPE OF CORE IWRC

SPECIFIED BREAKING LOAD 519.00 kN SAMPLE BROKE AT 549.09 kN

WT. OF ZINC COATING OF OUTER WIRE MIN. 0.000 g/㎡

ROPE LAY RHRL LAY LENGTH 177.18 mm

LUBRICATION B

CHEMICAL ANALYSIS OF WIRE ROD

| CHARGE NO. | C X 100 | Si X 100 | Mn X 100 | P X 1000 | S X 1000 |
|---|---|---|---|---|---|
| SF47012 | 72 | 21 | 69 | 16 | 7 |

DATE OF SAMPLE TEST *Jan. 06, 2015*

S. H. Ham

Approved by Q.C Manager S.H. Ham
KISWIRE LTD., KOREA

KS JIS ABS KR NK. G.Lloyd's DNV L.R BV

# LOAD LIMITER 권고 SETTING치

* POWER SOURCE : AC 3¢ 220V 60Hz

극동호이스트(주)

| HOIST | MOTOR 용량 | LOAD LIMITER 권고 SETTING치 | | | LOAD CURRENT | | C.T 용량 | REMARK |
|---|---|---|---|---|---|---|---|---|
| | | LOAD CURRENT | ADJ START TIME | SHOCK TIME | 100% | 110% | | |
| 40 TON | 33KW x 6P | 110% | 1 SEC | 1 SEC | 126.6 A | 139.3 A | 5 V.A | |
| | 3.7KW x 4P | 110% | 1 SEC | 1 SEC | 16.0 | 17.6 A | 5 V.A | |

* POWER SOURCE : AC 3¢ 380V 60Hz

극동호이스트(주)

| HOIST | MOTOR 용량 | LOAD LIMITER 권고 SETTING치 | | | LOAD CURRENT | | C.T 용량 | REMARK |
|---|---|---|---|---|---|---|---|---|
| | | LOAD CURRENT | ADJ START TIME | SHOCK TIME | 100% | 110% | | |
| 40 TON | 33KW x 6P | 110% | 1 SEC | 1 SEC | 77.3 A | 85.0 A | 5 V.A | |
| | 3.7KW x 4P | 110% | 1 SEC | 1 SEC | 9.3 A | 10.2 A | 5 V.A | |

* POWER SOURCE : AC 3¢ 440V 60Hz

극동호이스트(주)

| HOIST | MOTOR 용량 | LOAD LIMITER 권고 SETTING치 | | | LOAD CURRENT | | C.T 용량 | REMARK |
|---|---|---|---|---|---|---|---|---|
| | | LOAD CURRENT | ADJ START TIME | SHOCK TIME | 100% | 110% | | |
| 40 TON | 33KW x 6P | 110% | 1 SEC | 1 SEC | 66.3 A | 72.9 A | 5 V.A | |
| | 3.7KW x 4P | 110% | 1 SEC | 1 SEC | 8.0 A | 8.8 A | 5 V.A | |

NOTE

1. 상기 TABLE의 수치는 권고 SETTING 수치이며 MOTOR의 특성 및 현장 조건에 따라 변경 가능함.

무단복제 및 배포금지

# LOAD LIMITER 권고 SETTING치

* POWER SOURCE : AC 3¢ 460V 60Hz

극동호이스트(주)

| HOIST | MOTOR 용량 | LOAD LIMITER 권고 SETTING치 | | | LOAD CURRENT | | C.T 용량 | REMARK |
|---|---|---|---|---|---|---|---|---|
| | | LOAD CURRENT | ADJ START TIME | SHOCK TIME | 100% | 110% | | |
| 40 TON | 33KW x 6P | 110% | 1 SEC | 1 SEC | 56.6 A | 62.3 A | 5 V.A | |
| | 3.7KW x 4P | 110% | 1 SEC | 1 SEC | 7.7 A | 8.5 A | 5 V.A | |

* POWER SOURCE : AC 3¢ 480V 60Hz

극동호이스트(주)

| HOIST | MOTOR 용량 | LOAD LIMITER 권고 SETTING치 | | | LOAD CURRENT | | C.T 용량 | REMARK |
|---|---|---|---|---|---|---|---|---|
| | | LOAD CURRENT | ADJ START TIME | SHOCK TIME | 100% | 110% | | |
| 40 TON | 33KW x 6P | 110% | 1 SEC | 1 SEC | 54.2 A | 59.6 A | 5 V.A | |
| | 3.7KW x 4P | 110% | 1 SEC | 1 SEC | 7.3 A | 8.0 A | 5 V.A | |

NOTE

1. 상기 TABLE의 수치는 권고 SETTING 수치이며 MOTOR의 특성 및 현장 조건에 따라 변경 가능함.

무단복제 및 배포금지

# E.O.C.R 권고 SETTING치

* POWER SOURCE : AC 3¢ 220V 60Hz

극동호이스트(주)

| HOIST | MOTOR 용량 | MOTOR 정격 전류 | DRIVE TYPE | E.O.C.R TYPE | 권고 SETTING 치 | | | REMARK |
|---|---|---|---|---|---|---|---|---|
| | | | | | DELAY TIME | ERATION TI | CURRENT | |
| 40 TON | 33KW x 6P | 126.6 A | 1 DRAVE | SS-150 | 3 SEC | 1 SEC | 126.6 A | |
| | 3.7KW x 4P | 16.0 A | 1 DRAVE | SS-30 | 3 SEC | 1 SEC | 16.0 A | |

* POWER SOURCE : AC 3¢ 380V 60Hz

극동호이스트(주)

| HOIST | MOTOR 용량 | MOTOR 정격 전류 | DRIVE TYPE | E.O.C.R TYPE | 권고 SETTING 치 | | | REMARK |
|---|---|---|---|---|---|---|---|---|
| | | | | | DELAY TIME | ERATION TI | CURRENT | |
| 40 TON | 33KW x 6P | 77.3 A | 1 DRAVE | SS-100 | 3 SEC | 1 SEC | 77.3 A | |
| | 3.7KW x 4P | 9.3 A | 1 DRAVE | SS-30 | 3 SEC | 1 SEC | 9.3 A | |

* POWER SOURCE : AC 3¢ 440V 60Hz

극동호이스트(주)

| HOIST | MOTOR 용량 | MOTOR 정격 전류 | DRIVE TYPE | E.O.C.R TYPE | 권고 SETTING 치 | | | REMARK |
|---|---|---|---|---|---|---|---|---|
| | | | | | DELAY TIME | ERATION TI | CURRENT | |
| 40 TON | 33KW x 6P | 66.3 A | 1 DRAVE | SS-100 | 3 SEC | 1 SEC | 66.3 A | |
| | 3.7KW x 4P | 8.0 A | 1 DRAVE | SS-30 | 3 SEC | 1 SEC | 8.0 A | |

NOTE

1. 상기 TABLE의 수치는 권고 SETTING 수치이며 MOTOR의 특성 및 현장 조건에 따라 변경 가능함.

무단복제 및 배포금지

* POWER SOURCE : AC 3¢ 460V 60Hz

극동호이스트(주)

| HOIST | MOTOR 용량 | MOTOR 정격 전류 | DRIVE TYPE | E.O.C.R TYPE | 권고 SETTING 치 | | | REMARK |
|---|---|---|---|---|---|---|---|---|
| | | | | | DELAY TIME | ERATION TI | CURRENT | |
| 40 TON | 33KW x 6P | 56.6 A | 1 DRAVE | SS-100 | 3 SEC | 1 SEC | 56.6 A | |
| | 3.7KW x 4P | 7.7 A | 1 DRAVE | SS-30 | 3 SEC | 1 SEC | 7.7 A | |

* POWER SOURCE : AC 3¢ 480V 60Hz

극동호이스트(주)

| HOIST | MOTOR 용량 | MOTOR 정격 전류 | DRIVE TYPE | E.O.C.R TYPE | 권고 SETTING 치 | | | REMARK |
|---|---|---|---|---|---|---|---|---|
| | | | | | DELAY TIME | ERATION TI | CURRENT | |
| 40 TON | 33KW x 6P | 54.2 A | 1 DRAVE | SS-100 | 3 SEC | 1 SEC | 54.2 A | |
| | 3.7KW x 4P | 7.3 A | 1 DRAVE | SS-30 | 3 SEC | 1 SEC | 7.3 A | |

NOTE

1. 상기 TABLE의 수치는 권고 SETTING 수치이며 MOTOR의 특성 및 현장 조건에 따라 변경 가능함.

불법복제 및 배포금지

# E.O.C.R 권고 SETTING 치

* POWER SOURCE : AC3¢ 220V 60Hz

극동호이스트 (주)

| MOTOR 용량 | MOTOR 정격 전류 | DRIVE TYPE | E.O.C.R TYPE | 권고 SETTING 치 | | | REMARK |
|---|---|---|---|---|---|---|---|
| | | | | DELAY TIME | OPERATION TIME | CURRENT | |
| 0.2KW x 6P | 2.0 A | 1 DRIVE | SS - 05 | 3 SEC | 1 SEC | 2.0 A | |
| | | 2DRIVE | SS - 05 | 3 SEC | 1 SEC | 4.0 A | |
| 0.4KW x 4P | 2.7 A | 1 DRIVE | SS - 05 | 3 SEC | 1 SEC | 2.7 A | |
| | | 2DRIVE | SS - 30 | 3 SEC | 1 SEC | 5.4 A | |
| 0.5KW x 6P | 3.4 A | 1 DRIVE | SS - 05 | 3 SEC | 1 SEC | 3.4 A | |
| | | 2DRIVE | SS - 30 | 3 SEC | 1 SEC | 6.8 A | |
| 0.75KW x 4P | 4.1 A | 1 DRIVE | SS - 05 | 3 SEC | 1 SEC | 4.1 A | |
| | | 2DRIVE | SS - 30 | 3 SEC | 1 SEC | 8.2 A | |
| 1.0KW x 6P | 6.7 A | 1 DRIVE | SS - 30 | 3 SEC | 1 SEC | 6.7 A | |
| | | 2DRIVE | SS - 30 | 3 SEC | 1 SEC | 13.4 A | |
| 1.5KW x 4P | 7.3 A | 1 DRIVE | SS - 30 | 3 SEC | 1 SEC | 7.3 A | |
| | | 2DRIVE | SS - 30 | 3 SEC | 1 SEC | 14.6 A | |
| 1.5KW x 6P | 7.6 A | 1 DRIVE | SS - 30 | 3 SEC | 1 SEC | 7.6 A | |
| | | 2DRIVE | SS - 30 | 3 SEC | 1 SEC | 15.2 A | |
| 2.2KW x 4P | 10 A | 1 DRIVE | SS - 30 | 3 SEC | 1 SEC | 10 A | |
| | | 2 DRIVE | SS - 30 | 3 SEC | 1 SEC | 20 A | |
| 0.8/0.4KW x 4/8P | 4.8/4.25 A | 1 DRIVE | SS - 05 | 3 SEC | 1 SEC | 4.8 A | |
| | | | SS - 05 | 3 SEC | 1 SEC | 4.25 A | |
| | | 2 DRIVE | SS - 30 | 3 SEC | 1 SEC | 9.6 A | |
| | | | SS - 30 | 3 SEC | 1 SEC | 8.5 A | |
| 2.2KW x 6P | 12 A | 1 DRIVE | SS - 30 | 3 SEC | 1 SEC | 12 A | |
| | | 2DRIVE | SS - 30 | 3 SEC | 1 SEC | 24 A | |
| 3.7KW x 4P | 16 A | 1 DRIVE | SS - 30 | 3 SEC | 1 SEC | 16 A | |
| | | 2DRIVE | SS - 60 | 3 SEC | 1 SEC | 32 A | |

NOTE

1, 상기 TABLE의 수치는 권고 SETTING 수치이며 MOTOR의 특성 및 현장 조건에 따라 변경 가능함.

불법복제 및 배포금지

# E.O.C.R 권고 SETTING 치

* POWER SOURCE : AC3¢ 380V 60Hz

극동호이스트 (주)

| MOTOR 용량 | MOTOR 정격 전류 | DRIVE TYPE | E.O.C.R TYPE | 권고 SETTING 치 | | | REMARK |
|---|---|---|---|---|---|---|---|
| | | | | DELAY TIME | OPERATION TIME | CURRENT | |
| 0.2KW x 6P | 1.2 A | 1 DRIVE | SS - 05 | 3 SEC | 1 SEC | 1.2 A | |
| | | 2DRIVE | SS - 05 | 3 SEC | 1 SEC | 2.4 A | |
| 0.4KW x 4P | 1.6 A | 1 DRIVE | SS - 05 | 3 SEC | 1 SEC | 1.6 A | |
| | | 2DRIVE | SS - 05 | 3 SEC | 1 SEC | 2 | |
| 0.5KW x 6P | 2.0 A | 1 DRIVE | SS - 05 | 3 SEC | 1 SEC | 2.0 A | |
| | | 2DRIVE | SS - 05 | 3 SEC | 1 SEC | 4.0 A | |
| 0.75KW x 4P | 2.4 A | 1 DRIVE | SS - 05 | 3 SEC | 1 SEC | 2.4 A | |
| | | 2DRIVE | SS - 05 | 3 SEC | 1 SEC | 4.8 A | |
| 1.0KW x 6P | 3.9 A | 1 DRIVE | SS - 05 | 3 SEC | 1 SEC | 3.9 A | |
| | | 2DRIVE | SS - 30 | 3 SEC | 1 SEC | 7.8 A | |
| 1.5KW x 4P | 4.2 A | 1 DRIVE | SS - 05 | 3 SEC | 1 SEC | 4.2 A | |
| | | 2DRIVE | SS - 30 | 3 SEC | 1 SEC | 8.4 A | |
| 1.5KW x 6P | 4.4 A | 1 DRIVE | SS - 05 | 3 SEC | 1 SEC | 4.4 A | |
| | | 2DRIVE | SS - 30 | 3 SEC | 1 SEC | 8.8 A | |
| 2.2KW x 4P | 5.8 A | 1 DRIVE | SS - 30 | 3 SEC | 1 SEC | 5.8 A | |
| | | 2 DRIVE | SS - 30 | 3 SEC | 1 SEC | 11.6 A | |
| 0.8/0.4KW x 4/8P | 2.78/2.63 A | 1 DRIVE | SS - 05 | 3 SEC | 1 SEC | 2.78 A | |
| | | | SS - 05 | 3 SEC | 1 SEC | 2.63A | |
| | | 2 DRIVE | SS - 30 | 3 SEC | 1 SEC | 5.48 A | |
| | | | SS - 30 | 3 SEC | 1 SEC | 5.26 A | |
| 2.2KW x 6P | 7.0 A | 1 DRIVE | SS - 30 | 3 SEC | 1 SEC | 7.0 A | |
| | | 2DRIVE | SS - 30 | 3 SEC | 1 SEC | 14 A | |
| 3.7KW x 4P | 9.3 A | 1 DRIVE | SS - 30 | 3 SEC | 1 SEC | 9.3 A | |
| | | 2DRIVE | SS - 30 | 3 SEC | 1 SEC | 18.6 A | |

NOTE

1, 상기 TABLE의 수치는 권고 SETTING 수치이며 MOTOR의 특성 및 현장 조건에 따라 변경 가능함.

무단배포 및 복제 금지

# E.O.C.R 권고 SETTING 치

* POWER SOURCE : AC3¢ 440V 60Hz

극동호이스트 (주)

| MOTOR 용량 | MOTOR 정격 전류 | DRIVE TYPE | E.O.C.R TYPE | 권고 SETTING 치 | | | REMARK |
|---|---|---|---|---|---|---|---|
| | | | | DELAY TIME | OPERATION TIME | CURRENT | |
| 0.2KW x 6P | 1.0 A | 1 DRIVE | SS - 05 | 3 SEC | 1 SEC | 1.0 A | |
| | | 2DRIVE | SS - 05 | 3 SEC | 1 SEC | 2.0 A | |
| 0.4KW x 4P | 1.4 A | 1 DRIVE | SS - 05 | 3 SEC | 1 SEC | 1.4 A | |
| | | 2DRIVE | SS - 05 | 3 SEC | 1 SEC | 2.8 A | |
| 0.5KW x 6P | 1.7 A | 1 DRIVE | SS - 05 | 3 SEC | 1 SEC | 1.7 A | |
| | | 2DRIVE | SS - 05 | 3 SEC | 1 SEC | 3.4 A | |
| 0.75KW x 4P | 2.0 A | 1 DRIVE | SS - 05 | 3 SEC | 1 SEC | 2.0 A | |
| | | 2DRIVE | SS - 05 | 3 SEC | 1 SEC | 4.0 A | |
| 1.0KW x 6P | 3.3 A | 1 DRIVE | SS - 05 | 3 SEC | 1 SEC | 3.3 A | |
| | | 2DRIVE | SS - 30 | 3 SEC | 1 SEC | 6.6 A | |
| 1.5KW x 4P | 3.7 A | 1 DRIVE | SS - 05 | 3 SEC | 1 SEC | 3.7 A | |
| | | 2DRIVE | SS - 30 | 3 SEC | 1 SEC | 7.4 A | |
| 1.5KW x 6P | 3.8 A | 1 DRIVE | SS - 05 | 3 SEC | 1 SEC | 3.8 A | |
| | | 2DRIVE | SS - 30 | 3 SEC | 1 SEC | 7.6 A | |
| 2.2KW x 4P | 5.0 A | 1 DRIVE | SS - 30 | 3 SEC | 1 SEC | 5.0 A | |
| | | 2 DRIVE | SS - 30 | 3 SEC | 1 SEC | 10 A | |
| 0.8/0.4KW x 4/8P | 2.4/2.27 A | 1 DRIVE | SS - 05 | 3 SEC | 1 SEC | 2.4 A | |
| | | | SS - 05 | 3 SEC | 1 SEC | 2.27 A | |
| | | 2 DRIVE | SS - 05 | 3 SEC | 1 SEC | 4.8 A | |
| | | | SS - 05 | 3 SEC | 1 SEC | 4.54 A | |
| 2.2KW x 6P | 6.0 A | 1 DRIVE | SS - 30 | 3 SEC | 1 SEC | 6.0 A | |
| | | 2DRIVE | SS - 30 | 3 SEC | 1 SEC | 12.0 A | |
| 3.7KW x 4P | 8.0 A | 1 DRIVE | SS - 30 | 3 SEC | 1 SEC | 8.0 A | |
| | | 2DRIVE | SS - 30 | 3 SEC | 1 SEC | 16 A | |

NOTE

1, 상기 TABLE의 수치는 권고 SETTING 수치이며 MOTOR의 특성 및 현장 조건에 따라 변경 가능함.

무단배포 및 재 출 금지

# E.O.C.R 권고 SETTING 치

* POWER SOURCE : AC3¢ 460V 60Hz

극동호이스트 (주)

| MOTOR 용량 | MOTOR 정격 전류 | DRIVE TYPE | E.O.C.R TYPE | 권고 SETTING 치 | | | REMARK |
|---|---|---|---|---|---|---|---|
| | | | | DELAY TIME | OPERATION TIME | CURRENT | |
| 0.2KW x 6P | 1.0 A | 1 DRIVE | SS - 05 | 3 SEC | 1 SEC | 1.0 A | |
| | | 2DRIVE | SS - 05 | 3 SEC | 1 SEC | 2.0 A | |
| 0.4KW x 4P | 1.3 A | 1 DRIVE | SS - 05 | 3 SEC | 1 SEC | 1.3 A | |
| | | 2DRIVE | SS - 05 | 3 SEC | 1 SEC | 2.6 A | |
| 0.5KW x 6P | 1.7 A | 1 DRIVE | SS - 05 | 3 SEC | 1 SEC | 1.7 A | |
| | | 2DRIVE | SS - 05 | 3 SEC | 1 SEC | 3.4 A | |
| 0.75KW x 4P | 2.0 A | 1 DRIVE | SS - 05 | 3 SEC | 1 SEC | 2.0 A | |
| | | 2DRIVE | SS - 05 | 3 SEC | 1 SEC | 4.0 A | |
| 1.0KW x 6P | 3.2 A | 1 DRIVE | SS - 05 | 3 SEC | 1 SEC | 3.2 A | |
| | | 2DRIVE | SS - 30 | 3 SEC | 1 SEC | 6.4 A | |
| 1.5KW x 4P | 3.5 A | 1 DRIVE | SS - 05 | 3 SEC | 1 SEC | 3.5 A | |
| | | 2DRIVE | SS - 30 | 3 SEC | 1 SEC | 7.0 A | |
| 1.5KW x 6P | 3.6 A | 1 DRIVE | SS - 05 | 3 SEC | 1 SEC | 3.6 A | |
| | | 2DRIVE | SS - 30 | 3 SEC | 1 SEC | 7.2 A | |
| 2.2KW x 4P | 4.8 A | 1 DRIVE | SS - 05 | 3 SEC | 1 SEC | 4.8 A | |
| | | 2 DRIVE | SS - 30 | 3 SEC | 1 SEC | 9.6 A | |
| 0.8/0.4KW x 4/8P | 2.3/2.15 A | 1 DRIVE | SS - 05 | 3 SEC | 1 SEC | 2.3 A | |
| | | | SS - 05 | 3 SEC | 1 SEC | 2.15 A | |
| | | 2 DRIVE | SS - 05 | 3 SEC | 1 SEC | 4.6 A | |
| | | | SS - 05 | 3 SEC | 1 SEC | 4.3 A | |
| 2.2KW x 6P | 4.8 A | 1 DRIVE | SS - 05 | 3 SEC | 1 SEC | 4.8 A | |
| | | 2DRIVE | SS - 30 | 3 SEC | 1 SEC | 9.6 A | |
| 3.7KW x 4P | 7.7 A | 1 DRIVE | SS - 30 | 3 SEC | 1 SEC | 7.7 A | |
| | | 2DRIVE | SS - 30 | 3 SEC | 1 SEC | 15.4 A | |

NOTE

1. 상기 TABLE의 수치는 권고 SETTING 수치이며 MOTOR의 특성 및 현장 조건에 따라 변경 가능함.

무단배포 및 재생산 금지

# E.O.C.R 권고 SETTING 치

* POWER SOURCE : AC3¢ 480V 60Hz

극동호아스트 (주)

| MOTOR 용량 | MOTOR 정격 전류 | DRIVE TYPE | E.O.C.R TYPE | 권고 SETTING 치 | | | REMARK |
|---|---|---|---|---|---|---|---|
| | | | | DELAY TIME | OPERATION TIME | CURRENT | |
| 0.2KW x 6P | 0.9 A | 1 DRIVE | SS - 05 | 3 SEC | 1 SEC | 0.9 A | |
| | | 2DRIVE | SS - 05 | 3 SEC | 1 SEC | 1.8 A | |
| 0.4KW x 4P | 1.2 A | 1 DRIVE | SS - 05 | 3 SEC | 1 SEC | 1.2 A | |
| | | 2DRIVE | SS - 05 | 3 SEC | 1 SEC | 2.4 A | |
| 0.5KW x 6P | 1.6 A | 1 DRIVE | SS - 05 | 3 SEC | 1 SEC | 1.6 A | |
| | | 2DRIVE | SS - 05 | 3 SEC | 1 SEC | 3.2 A | |
| 0.75KW x 4P | 1.9 A | 1 DRIVE | SS - 05 | 3 SEC | 1 SEC | 1.9 A | |
| | | 2DRIVE | SS - 05 | 3 SEC | 1 SEC | 3.8 A | |
| 1.0KW x 6P | 3.1 A | 1 DRIVE | SS - 05 | 3 SEC | 1 SEC | 2.1 A | |
| | | 2DRIVE | SS - 30 | 3 SEC | 1 SEC | 4.2 A | |
| 1.5KW x 4P | 3.4 A | 1 DRIVE | SS - 05 | 3 SEC | 1 SEC | 3.4 A | |
| | | 2DRIVE | SS - 30 | 3 SEC | 1 SEC | 6.8 A | |
| 1.5KW x 6P | 3.5 A | 1 DRIVE | SS - 05 | 3 SEC | 1 SEC | 3.5 A | |
| | | 2DRIVE | SS - 30 | 3 SEC | 1 SEC | 7.0 A | |
| 2.2KW x 4P | 4.6 A | 1 DRIVE | SS - 05 | 3 SEC | 1 SEC | 4.6 A | |
| | | 2 DRIVE | SS - 30 | 3 SEC | 1 SEC | 9.2 A | |
| 0.8/0.4KW x 4/8P | 2.22/2.05 A | 1 DRIVE | SS - 05 | 3 SEC | 1 SEC | 2.22 A | |
| | | | SS - 05 | 3 SEC | 1 SEC | 2.05 A | |
| | | 2 DRIVE | SS - 05 | 3 SEC | 1 SEC | 4.44 A | |
| | | | SS - 05 | 3 SEC | 1 SEC | 4.1 A | |
| 2.2KW x 6P | 4.6 A | 1 DRIVE | SS - 05 | 3 SEC | 1 SEC | 4.6 A | |
| | | 2DRIVE | SS - 30 | 3 SEC | 1 SEC | 9.2 A | |
| 3.7KW x 4P | 7.3 A | 1 DRIVE | SS - 30 | 3 SEC | 1 SEC | 7.3 A | |
| | | 2DRIVE | SS - 30 | 3 SEC | 1 SEC | 14.6 A | |

NOTE

1, 상기 TABLE의 수치는 권고 SETTING 수치이며 MOTOR의 특성 및 현장 조건에 따라 변경 가능함.

무단복제 및 배포금지

불법복제 및 배포금지

# THREE PHASE INDUCTION MOTOR DATA SHEET

SCHEDULE OF TECHNICAL DATA

| | |
|---|---|
| 1. SERVICE | HOISTING |
| 2. MANUFACTURE | 극동 호이스트 (주) |
| 3. FRAME NUMBER | 225 M |
| 4. RATED POWER | 33 KW x 6 P |
| 5. RATED VOLTAGE AND FREQUENCY | 220 V 60 Hz |
| 6. MOTOR TYPE | SQUIRREL CAGE ROTOR TYPE |
| 7. SERVICE FACTOR AND RATTING | 1 . 0 , 30 MIN |
| 8. LOCATION AND INSULATION CLASS | INDOOR, OUTDOOR, B CLASS |
| 9. DESIGN TEMPERATURE RISE(BY RESISTANCE) | 80 ℃ |
| 10. FULL LOAD SPEED | 1160 RPM |
| 11. FULL LOAD CURRENT | 126.6 A |
| 12. LOCKED ROTOR CURRENT | 760.6 A |
| 13. MINIMUM STARTING VOLTAGE | 200 V |
| 14. EFFICIENCY AT 100% RATED LOAD | 89.4 % |
| 15. POWER FACTOR AT 100% RATED LOAD | 76.5 % |
| 16. FULL LOAD TORQUE | 58.2 KG.M |
| 17. SITE ALTITUDE(UNDER) | 1000 M |
| 18. ENCLOSURE & COOLING METHOD | T E F C |
| 19. TYPE OF BEARING | PL : 6313zz OPL : 6312zz |
| 20. MOUNTING | H O R I Z O N T A L |
| 21. MAXIMUM AMBIENT TEMPERATURE | 40 ℃ |
| 22. BEARING LUBRICATION | G R E A S E |
| 23. STARTING METHOD | F U L L V O L T A G E |

불법복제 및 배포금지

# THREE PHASE INDUCTION MOTOR DATA SHEET

SCHEDULE OF TECHNICAL DATA

| | |
|---|---|
| 1. SERVICE | HOISTING |
| 2. MANUFACTURE | 극동 호이스트 (주) |
| 3. FRAME NUMBER | 225 M |
| 4. RATED POWER | 33 KW x 6 P |
| 5. RATED VOLTAGE AND FREQUENCY | 380 V 60 Hz |
| 6. MOTOR TYPE | SQUIRREL CAGE ROTOR TYPE |
| 7. SERVICE FACTOR AND RATTING | 1 . 0 , 30 MIN |
| 8. LOCATION AND INSULATION CLASS | INDOOR, OUTDOOR, B CLASS |
| 9. DESIGN TEMPERATURE RISE(BY RESISTANCE) | 80 ℃ |
| 10. FULL LOAD SPEED | 1160 RPM |
| 11. FULL LOAD CURRENT | 77.3 A |
| 12. LOCKED ROTOR CURRENT | 463.8 A |
| 13. MINIMUM STARTING VOLTAGE | 345 V |
| 14. EFFICIENCY AT 100% RATED LOAD | 89.4 % |
| 15. POWER FACTOR AT 100% RATED LOAD | 76.5 % |
| 16. FULL LOAD TORQUE | 58.2 KG.M |
| 17. SITE ALTITUDE(UNDER) | 1000 M |
| 18. ENCLOSURE & COOLING METHOD | T E F C |
| 19. TYPE OF BEARING | PL : 6313zz OPL : 6312zz |
| 20. MOUNTING | H O R I Z O N T A L |
| 21. MAXIMUM AMBIENT TEMPERATURE | 40 ℃ |
| 22. BEARING LUBRICATION | G R E A S E |
| 23. STARTING METHOD | F U L L V O L T A G E |

불법복제 및 배포금지

# THREE PHASE INDUCTION MOTOR DATA SHEET

SCHEDULE OF TECHNICAL DATA

| | |
|---|---|
| 1. SERVICE | HOISTING |
| 2. MANUFACTURE | 극동 호이스트 (주) |
| 3. FRAME NUMBER | 225 M |
| 4. RATED POWER | 33 KW x 6 P |
| 5. RATED VOLTAGE AND FREQUENCY | 440 V 60 Hz |
| 6. MOTOR TYPE | SQUIRREL CAGE ROTOR TYPE |
| 7. SERVICE FACTOR AND RATTING | 1 . 0 , 30 MIN |
| 8. LOCATION AND INSULATION CLASS | INDOOR, OUTDOOR, B CLASS |
| 9. DESIGN TEMPERATURE RISE(BY RESISTANCE) | 80 ℃ |
| 10. FULL LOAD SPEED | 1160 RPM |
| 11. FULL LOAD CURRENT | 66.3 A |
| 12. LOCKED ROTOR CURRENT | 379.3 A |
| 13. MINIMUM STARTING VOLTAGE | 400 V |
| 14. EFFICIENCY AT 100% RATED LOAD | 89.4 % |
| 15. POWER FACTOR AT 100% RATED LOAD | 76.5 % |
| 16. FULL LOAD TORQUE | 58.2 KG.M |
| 17. SITE ALTITUDE(UNDER) | 1000 M |
| 18. ENCLOSURE & COOLING METHOD | T E F C |
| 19. TYPE OF BEARING | PL : 6313zz OPL : 6312zz |
| 20. MOUNTING | H O R I Z O N T A L |
| 21. MAXIMUM AMBIENT TEMPERATURE | 40 ℃ |
| 22. BEARING LUBRICATION | G R E A S E |
| 23. STARTING METHOD | F U L L V O L T A G E |

불법복제 및 배포금지

# THREE PHASE INDUCTION MOTOR DATA SHEET

SCHEDULE OF TECHNICAL DATA

| | |
|---|---|
| 1. SERVICE | HOISTING |
| 2. MANUFACTURE | 극동 호이스트 (주) |
| 3. FRAME NUMBER | 225 M |
| 4. RATED POWER | 33 KW x 6 P |
| 5. RATED VOLTAGE AND FREQUENCY | 460 V 60 Hz |
| 6. MOTOR TYPE | SQUIRREL CAGE ROTOR TYPE |
| 7. SERVICE FACTOR AND RATTING | 1 . 0 , 30 MIN |
| 8. LOCATION AND INSULATION CLASS | INDOOR, OUTDOOR, B CLASS |
| 9. DESIGN TEMPERATURE RISE(BY RESISTANCE) | 80 ℃ |
| 10. FULL LOAD SPEED | 1160 RPM |
| 11. FULL LOAD CURRENT | 56.6 A |
| 12. LOCKED ROTOR CURRENT | 339.3 A |
| 13. MINIMUM STARTING VOLTAGE | 418 V |
| 14. EFFICIENCY AT 100% RATED LOAD | 89.4 % |
| 15. POWER FACTOR AT 100% RATED LOAD | 76.5 % |
| 16. FULL LOAD TORQUE | 58.2 KG.M |
| 17. SITE ALTITUDE(UNDER) | 1000 M |
| 18. ENCLOSURE & COOLING METHOD | T E F C |
| 19. TYPE OF BEARING | PL : 6313zz OPL : 6312zz |
| 20. MOUNTING | H O R I Z O N T A L |
| 21. MAXIMUM AMBIENT TEMPERATURE | 40 ℃ |
| 22. BEARING LUBRICATION | G R E A S E |
| 23. STARTING METHOD | F U L L V O L T A G E |

불법복제 및 배포금지

# THREE PHASE INDUCTION MOTOR DATA SHEET

SCHEDULE OF TECHNICAL DATA

| | |
|---|---|
| 1. SERVICE | HOISTING |
| 2. MANUFACTURE | 극동 호이스트 (주) |
| 3. FRAME NUMBER | 225 M |
| 4. RATED POWER | 33 KW x 6 P |
| 5. RATED VOLTAGE AND FREQUENCY | 480 V 60 Hz |
| 6. MOTOR TYPE | SQUIRREL CAGE ROTOR TYPE |
| 7. SERVICE FACTOR AND RATTING | 1 . 0 , 30 MIN |
| 8. LOCATION AND INSULATION CLASS | INDOOR, OUTDOOR, B CLASS |
| 9. DESIGN TEMPERATURE RISE(BY RESISTANCE) | 80 ℃ |
| 10. FULL LOAD SPEED | 1160 RPM |
| 11. FULL LOAD CURRENT | 54.2 A |
| 12. LOCKED ROTOR CURRENT | 325.14 A |
| 13. MINIMUM STARTING VOLTAGE | 436 V |
| 14. EFFICIENCY AT 100% RATED LOAD | 89.4 % |
| 15. POWER FACTOR AT 100% RATED LOAD | 76.5 % |
| 16. FULL LOAD TORQUE | 58.2 KG.M |
| 17. SITE ALTITUDE(UNDER) | 1000 M |
| 18. ENCLOSURE & COOLING METHOD | T E F C |
| 19. TYPE OF BEARING | PL : 6313zz OPL : 6312zz |
| 20. MOUNTING | H O R I Z O N T A L |
| 21. MAXIMUM AMBIENT TEMPERATURE | 40 ℃ |
| 22. BEARING LUBRICATION | G R E A S E |
| 23. STARTING METHOD | F U L L V O L T A G E |

불법복제 및 배포금지

# THREE PHASE INDUCTION MOTOR DATA SHEET

SCHEDULE OF TECHNICAL DATA

| | |
|---|---|
| 1. SERVICE | CREEP HOISTING |
| 2. MANUFACTURE | 극동 호이스트 (주) |
| 3. FRAME NUMBER | 112 M |
| 4. RATED POWER | 3.7 KW x 4 P |
| 5. RATED VOLTAGE AND FREQUENCY | 220 V 60 Hz |
| 6. MOTOR TYPE | SQUIRREL CAGE ROTOR TYPE |
| 7. SERVICE FACTOR AND RATTING | 1 . 0 , 30 MIN |
| 8. LOCATION AND INSULATION CLASS | INDOOR, OUTDOOR, B CLASS |
| 9. DESIGN TEMPERATURE RISE(BY RESISTANCE) | 80 ℃ |
| 10. FULL LOAD SPEED | 1690 RPM |
| 11. FULL LOAD CURRENT | 16.0 A |
| 12. STARTING CURRENT AT RATED VOLTAGE | 81.5 A |
| 13. MINIMUM STARTING VOLTAGE | 200 V |
| 14. EFFICIENCY AT 100% RATED LOAD | 80.0 % |
| 15. POWER FACTOR AT 100% RATED LOAD | 76.0 % |
| 16. STARTING TORQUE | 4.04 KG.M |
| 17. SITE ALTITUDE(UNDER) | 1000 M |
| 18. ENCLOSURE & COOLING METHOD | T E N V |
| 19. TYPE OF BEARING | PL : 6206zz OPL : 6206zz |
| 20. MOUNTING | H O R I Z O N T A L |
| 21. MAXIMUM AMBIENT TEMPERATURE | 40 ℃ |
| 22. BEARING LUBRICATION | G R E A S E |
| 23. STARTING METHOD | F U L L V O L T A G E |

불법복제 및 배포금지

# THREE PHASE INDUCTION MOTOR DATA SHEET

SCHEDULE OF TECHNICAL DATA

| | |
|---|---|
| 1. SERVICE | CREEP HOISTING |
| 2. MANUFACTURE | 극동 호이스트 (주) |
| 3. FRAME NUMBER | 112 M |
| 4. RATED POWER | 3.7 KW x 4 P |
| 5. RATED VOLTAGE AND FREQUENCY | 380 V 60 Hz |
| 6. MOTOR TYPE | SQUIRREL CAGE ROTOR TYPE |
| 7. SERVICE FACTOR AND RATTING | 1 . 0 , 30 MIN |
| 8. LOCATION AND INSULATION CLASS | INDOOR, OUTDOOR, B CLASS |
| 9. DESIGN TEMPERATURE RISE(BY RESISTANCE) | 80 ℃ |
| 10. FULL LOAD SPEED | 1690 RPM |
| 11. FULL LOAD CURRENT | 9.3 A |
| 12. STARTING CURRENT AT RATED VOLTAGE | 56.8 A |
| 13. MINIMUM STARTING VOLTAGE | 345 V |
| 14. EFFICIENCY AT 100% RATED LOAD | 80.0 % |
| 15. POWER FACTOR AT 100% RATED LOAD | 76.0 % |
| 16. STARTING TORQUE | 4.04 KG.M |
| 17. SITE ALTITUDE(UNDER) | 1000 M |
| 18. ENCLOSURE & COOLING METHOD | T E N V |
| 19. TYPE OF BEARING | PL : 6206zz OPL : 6206zz |
| 20. MOUNTING | H O R I Z O N T A L |
| 21. MAXIMUM AMBIENT TEMPERATURE | 40 ℃ |
| 22. BEARING LUBRICATION | G R E A S E |
| 23. STARTING METHOD | F U L L V O L T A G E |

불법복제 및 배포금지

# THREE PHASE INDUCTION MOTOR DATA SHEET

SCHEDULE OF TECHNICAL DATA

| | |
|---|---|
| 1. SERVICE | CREEP HOISTING |
| 2. MANUFACTURE | 극동 호이스트 (주) |
| 3. FRAME NUMBER | 112 M |
| 4. RATED POWER | 3.7 KW x 4 P |
| 5. RATED VOLTAGE AND FREQUENCY | 440 V 60 Hz |
| 6. MOTOR TYPE | SQUIRREL CAGE ROTOR TYPE |
| 7. SERVICE FACTOR AND RATTING | 1 . 0 , 30 MIN |
| 8. LOCATION AND INSULATION CLASS | INDOOR, OUTDOOR, B CLASS |
| 9. DESIGN TEMPERATURE RISE(BY RESISTANCE) | 80 ℃ |
| 10. FULL LOAD SPEED | 1690 RPM |
| 11. FULL LOAD CURRENT | 8.0 A |
| 12. STARTING CURRENT AT RATED VOLTAGE | 45.7 A |
| 13. MINIMUM STARTING VOLTAGE | 400 V |
| 14. EFFICIENCY AT 100% RATED LOAD | 80.0 % |
| 15. POWER FACTOR AT 100% RATED LOAD | 76.0 % |
| 16. STARTING TORQUE | 4.04 KG.M |
| 17. SITE ALTITUDE(UNDER) | 1000 M |
| 18. ENCLOSURE & COOLING METHOD | T E N V |
| 19. TYPE OF BEARING | PL : 6206zz OPL : 6206zz |
| 20. MOUNTING | H O R I Z O N T A L |
| 21. MAXIMUM AMBIENT TEMPERATURE | 40 ℃ |
| 22. BEARING LUBRICATION | G R E A S E |
| 23. STARTING METHOD | F U L L V O L T A G E |

불법복제 및 배포금지

# THREE PHASE INDUCTION MOTOR DATA SHEET

SCHEDULE OF TECHNICAL DATA

| | |
|---|---|
| 1. SERVICE | CREEP HOISTING |
| 2. MANUFACTURE | 극동 호이스트 (주) |
| 3. FRAME NUMBER | 112 M |
| 4. RATED POWER | 3.7 KW x 4 P |
| 5. RATED VOLTAGE AND FREQUENCY | 460 V 60 Hz |
| 6. MOTOR TYPE | SQUIRREL CAGE ROTOR TYPE |
| 7. SERVICE FACTOR AND RATTING | 1 . 0 , 30 MIN |
| 8. LOCATION AND INSULATION CLASS | INDOOR, OUTDOOR, B CLASS |
| 9. DESIGN TEMPERATURE RISE(BY RESISTANCE) | 80 ℃ |
| 10. FULL LOAD SPEED | 1690 RPM |
| 11. FULL LOAD CURRENT | 7.7 A |
| 12. STARTING CURRENT AT RATED VOLTAGE | 44.65 A |
| 13. MINIMUM STARTING VOLTAGE | 418 V |
| 14. EFFICIENCY AT 100% RATED LOAD | 80.0 % |
| 15. POWER FACTOR AT 100% RATED LOAD | 76.0 % |
| 16. STARTING TORQUE | 4.04 KG.M |
| 17. SITE ALTITUDE(UNDER) | 1000 M |
| 18. ENCLOSURE & COOLING METHOD | T E N V |
| 19. TYPE OF BEARING | PL : 6206zz OPL : 6206zz |
| 20. MOUNTING | H O R I Z O N T A L |
| 21. MAXIMUM AMBIENT TEMPERATURE | 40 ℃ |
| 22. BEARING LUBRICATION | G R E A S E |
| 23. STARTING METHOD | F U L L V O L T A G E |

불법복제 및 배포금지

# THREE PHASE INDUCTION MOTOR DATA SHEET

SCHEDULE OF TECHNICAL DATA

| | |
|---|---|
| 1. SERVICE | CREEP HOISTING |
| 2. MANUFACTURE | 극동 호이스트 (주) |
| 3. FRAME NUMBER | 112 M |
| 4. RATED POWER | 3.7 KW x 4 P |
| 5. RATED VOLTAGE AND FREQUENCY | 480 V 60 Hz |
| 6. MOTOR TYPE | SQUIRREL CAGE ROTOR TYPE |
| 7. SERVICE FACTOR AND RATTING | 1 . 0 , 30 MIN |
| 8. LOCATION AND INSULATION CLASS | INDOOR, OUTDOOR, B CLASS |
| 9. DESIGN TEMPERATURE RISE(BY RESISTANCE) | 80 ℃ |
| 10. FULL LOAD SPEED | 1690 RPM |
| 11. FULL LOAD CURRENT | 7.3 A |
| 12. STARTING CURRENT AT RATED VOLTAGE | 43.14 A |
| 13. MINIMUM STARTING VOLTAGE | 436 V |
| 14. EFFICIENCY AT 100% RATED LOAD | 80.0 % |
| 15. POWER FACTOR AT 100% RATED LOAD | 76.0 % |
| 16. STARTING TORQUE | 4.04 KG.M |
| 17. SITE ALTITUDE(UNDER) | 1000 M |
| 18. ENCLOSURE & COOLING METHOD | T E N V |
| 19. TYPE OF BEARING | PL : 6206zz OPL : 6206zz |
| 20. MOUNTING | H O R I Z O N T A L |
| 21. MAXIMUM AMBIENT TEMPERATURE | 40 ℃ |
| 22. BEARING LUBRICATION | G R E A S E |
| 23. STARTING METHOD | F U L L V O L T A G E |

불법복제 및 배포금지

# THREE PHASE INDUCTION MOTOR DATA SHEET

SCHEDULE OF TECHNICAL DATA

| | |
|---|---|
| 1. SERVICE | TRAVERSING |
| 2. MANUFACTURE | 극동 호이스트 (주) |
| 3. FRAME NUMBER | 112 S |
| 4. RATED POWER | 2.2 KW x 4 P |
| 5. RATED VOLTAGE AND FREQUENCY | 220 V 60 Hz |
| 6. MOTOR TYPE | SQUIRREL CAGE ROTOR TYPE |
| 7. SERVICE FACTOR AND RATTING | 1 . 0 , 30 MIN |
| 8. LOCATION AND INSULATION CLASS | INDOOR, OUTDOOR, B CLASS |
| 9. DESIGN TEMPERATURE RISE(BY RESISTANCE) | 80 ℃ |
| 10. FULL LOAD SPEED | 1710 RPM |
| 11. FULL LOAD CURRENT | 10.0 A |
| 12. STARTING CURRENT AT RATED VOLTAGE | 56.0 A |
| 13. MINIMUM STARTING VOLTAGE | 200 V |
| 14. EFFICIENCY AT 100% RATED LOAD | 75.0 % |
| 15. POWER FACTOR AT 100% RATED LOAD | 77.0 % |
| 16. STARTING TORQUE | 2.56 KG.M |
| 17. SITE ALTITUDE(UNDER) | 1000 M |
| 18. ENCLOSURE & COOLING METHOD | T E N V |
| 19. TYPE OF BEARING | PL : 6206zz OPL : 6206zz |
| 20. MOUNTING | H O R I Z O N T A L |
| 21. MAXIMUM AMBIENT TEMPERATURE | 40 ℃ |
| 22. BEARING LUBRICATION | G R E A S E |
| 23. STARTING METHOD | F U L L V O L T A G E |

불법복제 및 배포금지

# THREE PHASE INDUCTION MOTOR DATA SHEET

SCHEDULE OF TECHNICAL DATA

| | |
|---|---|
| 1. SERVICE | TRAVERSING |
| 2. MANUFACTURE | 극동 호이스트 (주) |
| 3. FRAME NUMBER | 112 S |
| 4. RATED POWER | 2.2 KW x 4 P |
| 5. RATED VOLTAGE AND FREQUENCY | 380 V 60 Hz |
| 6. MOTOR TYPE | SQUIRREL CAGE ROTOR TYPE |
| 7. SERVICE FACTOR AND RATTING | 1 . 0 , 30 MIN |
| 8. LOCATION AND INSULATION CLASS | INDOOR, OUTDOOR, B CLASS |
| 9. DESIGN TEMPERATURE RISE(BY RESISTANCE) | 80 ℃ |
| 10. FULL LOAD SPEED | 1710 RPM |
| 11. FULL LOAD CURRENT | 5.8 A |
| 12. STARTING CURRENT AT RATED VOLTAGE | 43.2 A |
| 13. MINIMUM STARTING VOLTAGE | 345 V |
| 14. EFFICIENCY AT 100% RATED LOAD | 75.0 % |
| 15. POWER FACTOR AT 100% RATED LOAD | 77.0 % |
| 16. STARTING TORQUE | 2.56 KG.M |
| 17. SITE ALTITUDE(UNDER) | 1000 M |
| 18. ENCLOSURE & COOLING METHOD | T E N V |
| 19. TYPE OF BEARING | PL : 6206zz OPL :6206zz |
| 20. MOUNTING | H O R I Z O N T A L |
| 21. MAXIMUM AMBIENT TEMPERATURE | 40 ℃ |
| 22. BEARING LUBRICATION | G R E A S E |
| 23. STARTING METHOD | F U L L V O L T A G E |

불법복제 및 배포금지

# THREE PHASE INDUCTION MOTOR DATA SHEET

SCHEDULE OF TECHNICAL DATA

| | |
|---|---|
| 1. SERVICE | TRAVERSING |
| 2. MANUFACTURE | 극동 호이스트 (주) |
| 3. FRAME NUMBER | 112 S |
| 4. RATED POWER | 2.2 KW x 4 P |
| 5. RATED VOLTAGE AND FREQUENCY | 440 V 60 Hz |
| 6. MOTOR TYPE | SQUIRREL CAGE ROTOR TYPE |
| 7. SERVICE FACTOR AND RATTING | 1 . 0 , 30 MIN |
| 8. LOCATION AND INSULATION CLASS | INDOOR, OUTDOOR, B CLASS |
| 9. DESIGN TEMPERATURE RISE(BY RESISTANCE) | 80 ℃ |
| 10. FULL LOAD SPEED | 1710 RPM |
| 11. FULL LOAD CURRENT | 5.0 A |
| 12. STARTING CURRENT AT RATED VOLTAGE | 29.7 A |
| 13. MINIMUM STARTING VOLTAGE | 400 V |
| 14. EFFICIENCY AT 100% RATED LOAD | 75.0 % |
| 15. POWER FACTOR AT 100% RATED LOAD | 77.0 % |
| 16. STARTING TORQUE | 2.56 KG.M |
| 17. SITE ALTITUDE(UNDER) | 1000 M |
| 18. ENCLOSURE & COOLING METHOD | T E N V |
| 19. TYPE OF BEARING | PL : 6206zz OPL : 6206zz |
| 20. MOUNTING | H O R I Z O N T A L |
| 21. MAXIMUM AMBIENT TEMPERATURE | 40 ℃ |
| 22. BEARING LUBRICATION | G R E A S E |
| 23. STARTING METHOD | F U L L V O L T A G E |

불법복제 및 배포금지

# THREE PHASE INDUCTION MOTOR DATA SHEET

SCHEDULE OF TECHNICAL DATA

| | |
|---|---|
| 1. SERVICE | TRAVERSING |
| 2. MANUFACTURE | 극동 호이스트 (주) |
| 3. FRAME NUMBER | 112 S |
| 4. RATED POWER | 2.2 KW x 4 P |
| 5. RATED VOLTAGE AND FREQUENCY | 460 V 60 Hz |
| 6. MOTOR TYPE | SQUIRREL CAGE ROTOR TYPE |
| 7. SERVICE FACTOR AND RATTING | 1 . 0 , 30 MIN |
| 8. LOCATION AND INSULATION CLASS | INDOOR, OUTDOOR, B CLASS |
| 9. DESIGN TEMPERATURE RISE(BY RESISTANCE) | 80 ℃ |
| 10. FULL LOAD SPEED | 1710 RPM |
| 11. FULL LOAD CURRENT | 4.8 A |
| 12. STARTING CURRENT AT RATED VOLTAGE | 28.3 A |
| 13. MINIMUM STARTING VOLTAGE | 418 V |
| 14. EFFICIENCY AT 100% RATED LOAD | 75.0 % |
| 15. POWER FACTOR AT 100% RATED LOAD | 77.0 % |
| 16. STARTING TORQUE | 2.56 KG.M |
| 17. SITE ALTITUDE(UNDER) | 1000 M |
| 18. ENCLOSURE & COOLING METHOD | T E N V |
| 19. TYPE OF BEARING | PL : 6206zz OPL : 6206zz |
| 20. MOUNTING | H O R I Z O N T A L |
| 21. MAXIMUM AMBIENT TEMPERATURE | 40 ℃ |
| 22. BEARING LUBRICATION | G R E A S E |
| 23. STARTING METHOD | F U L L V O L T A G E |

불법복제 및 배포금지

# THREE PHASE INDUCTION MOTOR DATA SHEET

SCHEDULE OF TECHNICAL DATA

| | |
|---|---|
| 1. SERVICE | TRAVERSING |
| 2. MANUFACTURE | 극동 호이스트 (주) |
| 3. FRAME NUMBER | 112 S |
| 4. RATED POWER | 2.2 KW x 4 P |
| 5. RATED VOLTAGE AND FREQUENCY | 480 V 60 Hz |
| 6. MOTOR TYPE | SQUIRREL CAGE ROTOR TYPE |
| 7. SERVICE FACTOR AND RATTING | 1 . 0 , 30 MIN |
| 8. LOCATION AND INSULATION CLASS | INDOOR, OUTDOOR, B CLASS |
| 9. DESIGN TEMPERATURE RISE(BY RESISTANCE) | 80 ℃ |
| 10. FULL LOAD SPEED | 1710 RPM |
| 11. FULL LOAD CURRENT | 4.6 A |
| 12. STARTING CURRENT AT RATED VOLTAGE | 27.1 A |
| 13. MINIMUM STARTING VOLTAGE | 436 V |
| 14. EFFICIENCY AT 100% RATED LOAD | 75.0 % |
| 15. POWER FACTOR AT 100% RATED LOAD | 77.0 % |
| 16. STARTING TORQUE | 2.56 KG.M |
| 17. SITE ALTITUDE(UNDER) | 1000 M |
| 18. ENCLOSURE & COOLING METHOD | T E N V |
| 19. TYPE OF BEARING | PL : 6206zz OPL : 6206zz |
| 20. MOUNTING | H O R I Z O N T A L |
| 21. MAXIMUM AMBIENT TEMPERATURE | 40 ℃ |
| 22. BEARING LUBRICATION | G R E A S E |
| 23. STARTING METHOD | F U L L V O L T A G E |

불법복제 및 배포금지

# THREE PHASE INDUCTION MOTOR DATA SHEET

SCHEDULE OF TECHNICAL DATA

| | |
|---|---|
| 1. SERVICE | TRAVERSING |
| 2. MANUFACTURE | KUK DONG HOIST CO., LTD. |
| 3. FRAME NUMBER | 112 S |
| 4. RATED POWER | 1.5 KW x 6 P |
| 5. RATED VOLTAGE AND FREQUENCY | 220 V 60 Hz |
| 6. MOTOR TYPE | SQUIRREL CAGE ROTOR TYPE |
| 7. SERVICE FACTOR AND RATTING | 1 . 0 , 30 MIN |
| 8. LOCATION AND INSULATION CLASS | INDOOR, OUTDOOR, B CLASS |
| 9. DESIGN TEMPERATURE RISE(BY RESISTANCE) | 80 ℃ |
| 10. FULL LOAD SPEED | 1140 RPM |
| 11. FULL LOAD CURRENT | 7.6 A |
| 12. STARTING CURRENT AT RATED VOLTAGE | 42.5 A |
| 13. MINIMUM STARTING VOLTAGE | 200 V |
| 14. EFFICIENCY AT 100% RATED LOAD | 74.5 % |
| 15. POWER FACTOR AT 100% RATED LOAD | 69.0 % |
| 16. STARTING TORQUE | 1.3 KG.M |
| 17. SITE ALTITUDE(UNDER) | 1000 M |
| 18. ENCLOSURE & COOLING METHOD | T E N V |
| 19. TYPE OF BEARING | PL : 6208zz OPL : 6206zz |
| 20. MOUNTING | H O R I Z O N T A L |
| 21. MAXIMUM AMBIENT TEMPERATURE | 40 ℃ |
| 22. BEARING LUBRICATION | G R E A S E |
| 23. STARTING METHOD | F U L L V O L T A G E |

불법복제 및 배포금지

# THREE PHASE INDUCTION MOTOR DATA SHEET

SCHEDULE OF TECHNICAL DATA

| | |
|---|---|
| 1. SERVICE | TRAVERSING |
| 2. MANUFACTURE | KUK DONG HOIST CO., LTD. |
| 3. FRAME NUMBER | 112 S |
| 4. RATED POWER | 1.5 KW x 6 P |
| 5. RATED VOLTAGE AND FREQUENCY | 380 V 60 Hz |
| 6. MOTOR TYPE | SQUIRREL CAGE ROTOR TYPE |
| 7. SERVICE FACTOR AND RATTING | 1 . 0 , 30 MIN |
| 8. LOCATION AND INSULATION CLASS | INDOOR, OUTDOOR, B CLASS |
| 9. DESIGN TEMPERATURE RISE(BY RESISTANCE) | 80 ℃ |
| 10. FULL LOAD SPEED | 1140 RPM |
| 11. FULL LOAD CURRENT | 4.4 A |
| 12. STARTING CURRENT AT RATED VOLTAGE | 36.8 A |
| 13. MINIMUM STARTING VOLTAGE | 342 V |
| 14. EFFICIENCY AT 100% RATED LOAD | 74.5 % |
| 15. POWER FACTOR AT 100% RATED LOAD | 69.0 % |
| 16. STARTING TORQUE | 1.3 KG.M |
| 17. SITE ALTITUDE(UNDER) | 1000 M |
| 18. ENCLOSURE & COOLING METHOD | T E N V |
| 19. TYPE OF BEARING | PL : 6208zz OPL : 6206zz |
| 20. MOUNTING | H O R I Z O N T A L |
| 21. MAXIMUM AMBIENT TEMPERATURE | 40 ℃ |
| 22. BEARING LUBRICATION | G R E A S E |
| 23. STARTING METHOD | F U L L V O L T A G E |

불법복제 및 배포금지

# THREE PHASE INDUCTION MOTOR DATA SHEET

SCHEDULE OF TECHNICAL DATA

| | |
|---|---|
| 1. SERVICE | TRAVERSING |
| 2. MANUFACTURE | KUK DONG HOIST CO., LTD. |
| 3. FRAME NUMBER | 112 S |
| 4. RATED POWER | 1.5 KW x 6 P |
| 5. RATED VOLTAGE AND FREQUENCY | 440 V 60 Hz |
| 6. MOTOR TYPE | SQUIRREL CAGE ROTOR TYPE |
| 7. SERVICE FACTOR AND RATTING | 1 . 0 , 30 MIN |
| 8. LOCATION AND INSULATION CLASS | INDOOR, OUTDOOR, B CLASS |
| 9. DESIGN TEMPERATURE RISE(BY RESISTANCE) | 80 ℃ |
| 10. FULL LOAD SPEED | 1140 RPM |
| 11. FULL LOAD CURRENT | 3.8 A |
| 12. STARTING CURRENT AT RATED VOLTAGE | 28.7 A |
| 13. MINIMUM STARTING VOLTAGE | 400 V |
| 14. EFFICIENCY AT 100% RATED LOAD | 74.5 % |
| 15. POWER FACTOR AT 100% RATED LOAD | 69.0 % |
| 16. STARTING TORQUE | 1.3 KG.M |
| 17. SITE ALTITUDE(UNDER) | 1000 M |
| 18. ENCLOSURE & COOLING METHOD | T E N V |
| 19. TYPE OF BEARING | PL : 6208zz OPL : 6206zz |
| 20. MOUNTING | H O R I Z O N T A L |
| 21. MAXIMUM AMBIENT TEMPERATURE | 40 ℃ |
| 22. BEARING LUBRICATION | G R E A S E |
| 23. STARTING METHOD | F U L L V O L T A G E |

불법복제 및 배포금지

# THREE PHASE INDUCTION MOTOR DATA SHEET

SCHEDULE OF TECHNICAL DATA

| | |
|---|---|
| 1. SERVICE | TRAVERSING |
| 2. MANUFACTURE | KUK DONG HOIST CO., LTD. |
| 3. FRAME NUMBER | 112 S |
| 4. RATED POWER | 1.5 KW x 6 P |
| 5. RATED VOLTAGE AND FREQUENCY | 460 V 60 Hz |
| 6. MOTOR TYPE | SQUIRREL CAGE ROTOR TYPE |
| 7. SERVICE FACTOR AND RATTING | 1 . 0 , 30 MIN |
| 8. LOCATION AND INSULATION CLASS | INDOOR, OUTDOOR, B CLASS |
| 9. DESIGN TEMPERATURE RISE(BY RESISTANCE) | 80 ℃ |
| 10. FULL LOAD SPEED | 1140 RPM |
| 11. FULL LOAD CURRENT | 3.6 A |
| 12. STARTING CURRENT AT RATED VOLTAGE | 26.8 A |
| 13. MINIMUM STARTING VOLTAGE | 400 V |
| 14. EFFICIENCY AT 100% RATED LOAD | 74.5 % |
| 15. POWER FACTOR AT 100% RATED LOAD | 69.0 % |
| 16. STARTING TORQUE | 1.3 KG.M |
| 17. SITE ALTITUDE(UNDER) | 1000 M |
| 18. ENCLOSURE & COOLING METHOD | T E N V |
| 19. TYPE OF BEARING | PL : 6208zz OPL : 6206zz |
| 20. MOUNTING | H O R I Z O N T A L |
| 21. MAXIMUM AMBIENT TEMPERATURE | 40 ℃ |
| 22. BEARING LUBRICATION | G R E A S E |
| 23. STARTING METHOD | F U L L V O L T A G E |

불법복제 및 배포금지

# THREE PHASE INDUCTION MOTOR DATA SHEET

SCHEDULE OF TECHNICAL DATA

| | |
|---|---|
| 1. SERVICE | TRAVERSING |
| 2. MANUFACTURE | KUK DONG HOIST CO., LTD. |
| 3. FRAME NUMBER | 112 S |
| 4. RATED POWER | 1.5 KW x 6 P |
| 5. RATED VOLTAGE AND FREQUENCY | 480 V 60 Hz |
| 6. MOTOR TYPE | SQUIRREL CAGE ROTOR TYPE |
| 7. SERVICE FACTOR AND RATTING | 1 . 0 , 30 MIN |
| 8. LOCATION AND INSULATION CLASS | INDOOR, OUTDOOR, B CLASS |
| 9. DESIGN TEMPERATURE RISE(BY RESISTANCE) | 80 ℃ |
| 10. FULL LOAD SPEED | 1140 RPM |
| 11. FULL LOAD CURRENT | 3.5 A |
| 12. STARTING CURRENT AT RATED VOLTAGE | 25.4 A |
| 13. MINIMUM STARTING VOLTAGE | 400 V |
| 14. EFFICIENCY AT 100% RATED LOAD | 74.5 % |
| 15. POWER FACTOR AT 100% RATED LOAD | 69.0 % |
| 16. STARTING TORQUE | 1.3 KG.M |
| 17. SITE ALTITUDE(UNDER) | 1000 M |
| 18. ENCLOSURE & COOLING METHOD | T E N V |
| 19. TYPE OF BEARING | PL : 6208zz OPL : 6206zz |
| 20. MOUNTING | H O R I Z O N T A L |
| 21. MAXIMUM AMBIENT TEMPERATURE | 40 ℃ |
| 22. BEARING LUBRICATION | G R E A S E |
| 23. STARTING METHOD | F U L L V O L T A G E |

불법복제 및 배포금지

E56B-2A3B-833B-B079

# 방송통신기자재등의 적합인증서

*Certificate of Broadcasting and Communication Equipments*

| | |
|---|---|
| 상호 또는 성명<br>*Trade Name or Applicant* | 주식회사 케이지오토 |
| 기자재 명칭<br>*Equipment Name* | 특정소출력 무선기기(데이터전송용 무선기기) |
| 기본모델명<br>*Basic Model Number* | KG-R12MLHCCC |
| 파생모델명<br>*Series Model Number* | KG-R12YLHCCA, KG-R12YLHCCC, KG-R12MLHAAA, KG-R12MLHCCA, KG-R12MLHCAA, KG-R12YLHCAA, KG-R12YLHAAA |
| 인증번호<br>*Certification No.* | MSIP-CRM-KGO-KG-R12MLHCCC |
| 제조자/제조국가<br>*Manufacturer/ Country of Origin* | 주식회사 케이지오토 / 한국 |
| 인증연월일<br>*Date of Certification* | 2015-06-24 |
| 기타<br>*Others* | |

위 기자재는「전파법」제58조의2 제2항에 따라 인증되었음을 증명합니다.

It is verified that foregoing equipment has been certificated under the Clause 2, Article 58-2 of Radio Waves Act.

2015년(Year) 06월(Month) 24일(Date)

국립전파연구원장

*Director General of National Radio Research Agency*

※ 인증 받은 방송통신기자재는 반드시 "적합성평가표시"를 부착하여 유통하여야 합니다
위반시 과태료 처분 및 인증이 취소될 수 있습니다

불법복제 및 배포금지

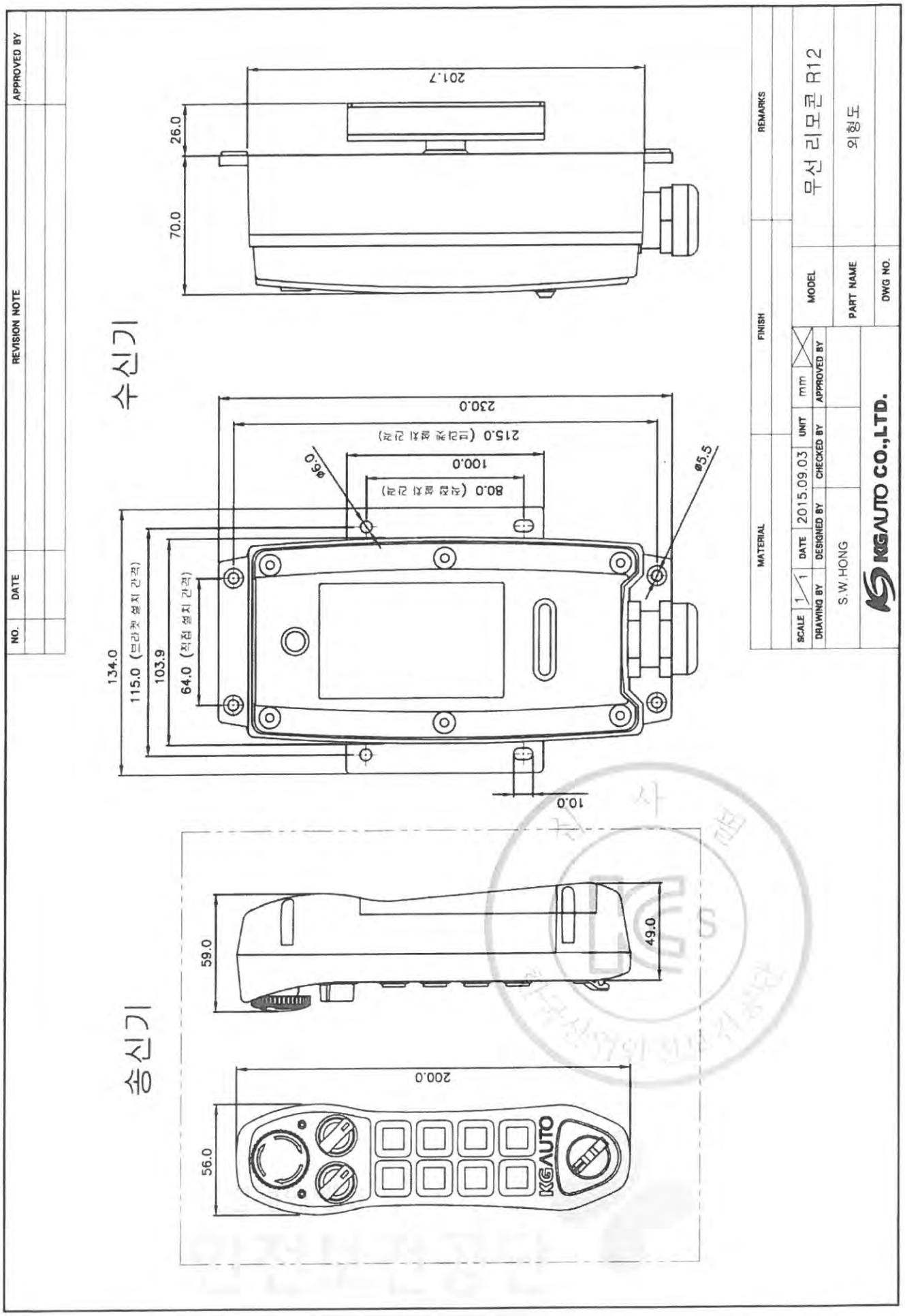
수신기
송신기
201.7
26.0
70.0
230.0
215.0 (브라켓 설치 간격)
100.0
80.0 (직접 설치 간격)
ø6.0
ø5.5
134.0
115.0 (브라켓 설치 간격)
103.9
64.0 (직접 설치 간격)
10.0
59.0
49.0
200.0
56.0
KGAUTO
NO.
DATE
REVISION NOTE
APPROVED BY
REMARKS
FINISH
MATERIAL
SCALE 1/1
DATE 2015.09.03
UNIT mm
DRAWING BY
DESIGNED BY S.W.HONG
CHECKED BY
APPROVED BY
MODEL 무선 리모콘 R12
PART NAME 외형도
DWG NO.
KGAUTO CO.,LTD.

| NO. | DATE | REVISION NOTE | APPROVED BY |
|---|---|---|---|
| | | | |
| | | | |

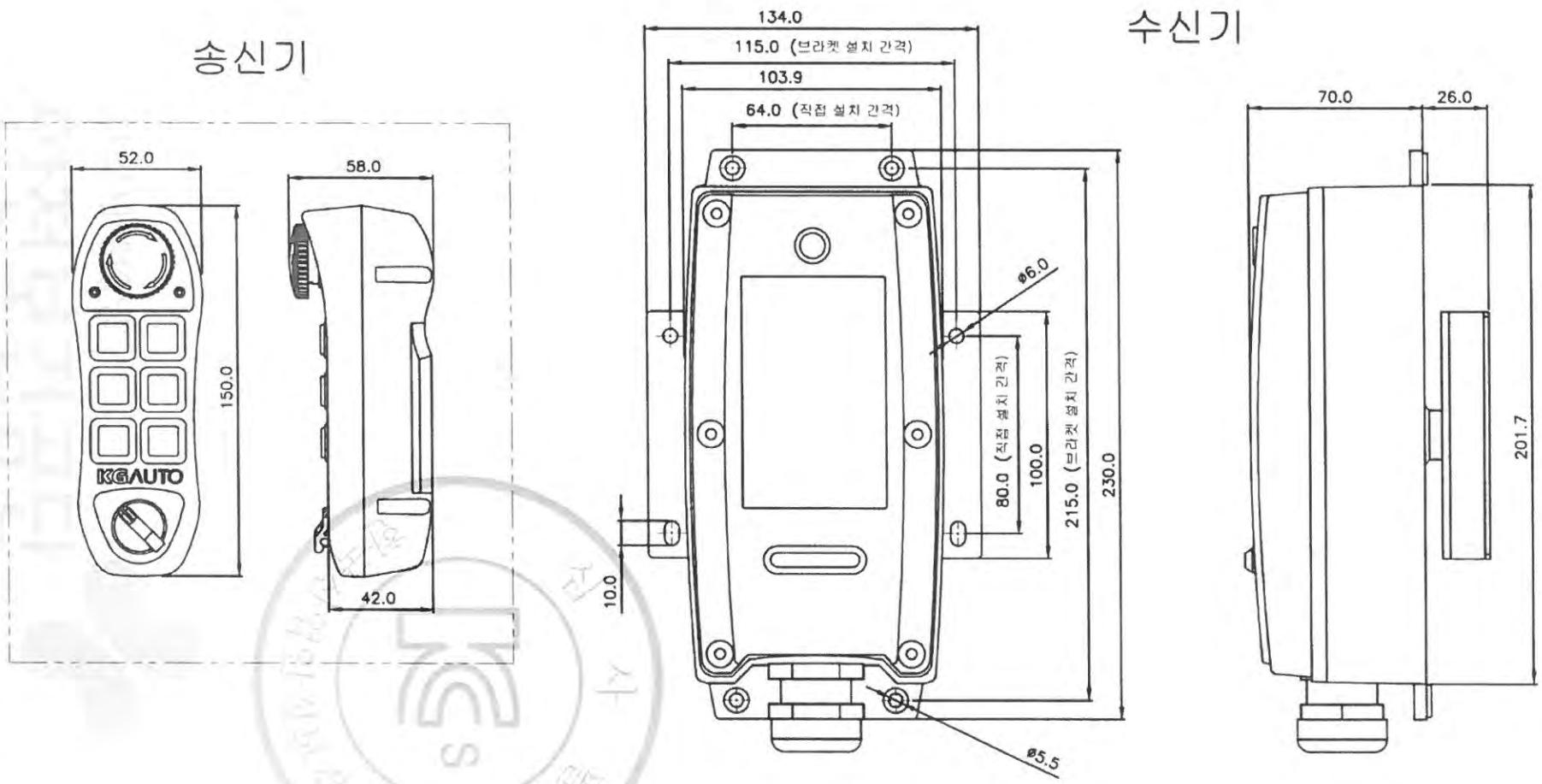


| MATERIAL | FINISH | REMARKS |
|---|---|---|
| | | |

| | | | | | |
|---|---|---|---|---|---|
| SCALE 1/1 | DATE 2015.09.03 | UNIT mm | | MODEL | 무선 리모콘 R08 |
| DRAWING BY | DESIGNED BY | CHECKED BY | APPROVED BY | | |
| S.W.HONG | | | | PART NAME | 외형도 |
| KGAUTO CO.,LTD. | | | | DWG NO. | |

불법복제 및 배포금지

불법복제 및 배포금지

제 2015 - 47427 호

# 안 전 인 증 서

( 사업장명 ) 극동호이스트(주)

( 소 재 지(425-833)경기도 안산시 성곡동630-2 반월공단 B-607-14

위 사업장에서 제조하는 아래의 품목이 산업안전보건법 제34조 및 같은 법 시행규칙 제58조의4제4항에 따른 안전인증 심사 결과 안전·보건기준에 적합하므로 안전인증표시의 사용을 인증합니다.

품 목

호이스트

형식,모델(용량,등급)/인증번호

KD5 (5Ton) /15-AQ2AC-00229

인 증 기 준

고용노동부 고시 제2012 - 33호 ( 위험기계,기구 의무안전인증 고시 )

인 증 조 건

2015년 01월 27일

한국산업안전보건공단이사장

불법복제 및 배포금지

# 서 면 심 사 서 류

## 형식 번호 : KD5


극 동 호 이 스 트 (주)

工場 : 경기도 안산시 단원구 해봉로 119 (반월공단607-14)

電話 : 031) 491 - 5311

FAX : 031) 494 - 5315

불법복제 및 배포금지
불법복제 및 배포금지

# 동 일 형 식 일 람 표

| 사업장명 | 극동호이스트㈜ | 개정일자 및 번호 | 2015년 01월 06일 | 인증번호 | |
|---|---|---|---|---|---|
| 형식 및 모델 | | 동일 형식 인정범위 및 내역 | | | |
| 형식 | 모델 | 권상속도 (m/min) | 횡행속도 (m/min) | 양정(m) | 횡행방식 | 비 고 |
| KD5 | KD5-L6-M | 8.4<br>5.6<br>4.2 | 고속:24m/min<br>저속:16m/min<br>듀얼고속:<br>24/12m/min<br>듀얼저속:<br>16/8m/min | 6 | 모터구동식 | |
| | KD5-L9-M | | | 9 | | |
| | KD5-L12-M | | | 12 | | |
| | KD5-L18-M | | | 18 | | |
| | KD5-L24-M | | | 24 | | |
| | KD5-L30-M | | | 30 | | |
| | KD5-L36-M | | | 36 | | 추가 |
| | KD5-L40-M | | | 40 | | 추가 |
| | KD5-L18-M-H | | | 18 | | |
| | KD5-L24-M-H | | | 24 | | |
| | KD5-L30-M-H | | | 30 | | |
| | KD5-L36-M-H | | | 36 | | 추가 |
| | KD5-L40-M-H | | | 40 | | 추가 |
| | KD5-L6-S | | - | 6 | 정치식 | |
| | KD5-L9-S | | | 9 | | |
| | KD5-L12-S | | | 12 | | |
| | KD5-L18-S | | | 18 | | |
| | KD5-L24-S | | | 24 | | |
| | KD5-L30-S | | | 30 | | |
| | KD5-L36-S | | | 36 | | 추가 |
| | KD5-L40-S | | | 40 | | 추가 |
| | KD5-L6-P | | | 6 | 수동구동식 | |
| | KD5-L9-P | | | 9 | | |
| | KD5-L12-P | | | 12 | | |
| | KDC5-L6-M | 5.6/0.56 | 고속:24m/min<br>저속:16m/min<br>듀얼고속:<br>24/12m/min<br>듀얼저속:<br>16/8m/min | 6 | 모터구동식 | |
| | KDC5-L9-M | | | 9 | | |
| | KDC5-L12-M | | | 12 | | |
| | KDC5-L18-M | | | 18 | | |
| | KDC5-L24-M | | | 24 | | |
| | KDC5-L30-M | | | 30 | | |
| | KDC5-L36-M | | | 36 | | 추가 |
| | KDC5-L40-M | | | 40 | | 추가 |
| | KDC5-L18-M-H | | | 18 | | |
| | KDC5-L24-M-H | | | 24 | | |
| | KDC5-L30-M-H | | | 30 | | |
| | KDC5-L36-M-H | | | 36 | | 추가 |
| | KDC5-L40-M-H | | | 40 | | 추가 |
| | KDC5-L6-S | | - | 6 | 정치식 | |
| | KDC5-L9-S | | | 9 | | |
| | KDC5-L12-S | | | 12 | | |
| | KDC5-L18-S | | | 18 | | |
| | KDC5-L24-S | | | 24 | | |
| | KDC5-L30-S | | | 30 | | |
| | KDC5-L36-S | | | 36 | | 추가 |
| | KDC5-L40-S | | | 40 | | 추가 |
| | KDC5-L6-P | | | 6 | 수동구동식 | |
| | KDC5-L9-P | | | 9 | | |
| | KDC5-L12-P | | | 12 | | |

불법복제 및 배포금지
불법복제 및 배포금지

제 2012-BJ-0009 호

# 안 전 인 증 서

정호엔지니어링

경기도 광명시 노동사동 440-5

위 사업장에서 제조하는 아래의 품목이 산업안전보건법 제34조 및 같은 법 시행규칙 제58조의4제4항에 따른 안전인증 심사 결과 안전·보건기준에 적합하므로 안전인증표시의 사용을 인증합니다.

**품 목**

양중기용 과부하방지장치

**형식·모델/용량·등급/인증번호**

| 형식 모델 | 용량 등급 | 인증번호 |
|---|---|---|
| JDL-100 | J-2 | 12-AV2BJ-0009 |

**인 증 기 준**

방호장치 의무안전인증 고시(고용노동부고시 제2010-36호)

**인 증 조 건**

아래 주소에서 생산되는 제품에 한함.

정호엔지니어링, 경기도 광명시 노동사동 440-5

2012년 06월 11일

한국산업안전보건공단 이사장

1-안전인증서.jpg 123 KB

PC저장 클라우드 저장 삭제

불법복제 및 배포금지
불법복제 및 배포금지

# 2. 도 면

검사필
한국산업안전보건공단

안전보건공단
192.168.11.51 / 2017-06-28 09:26:17

불법복제 및 배포금지
불법복제 및 배포금지

# 1) 기　　계

검사필
한국산업안전보건공단
안전보건공단

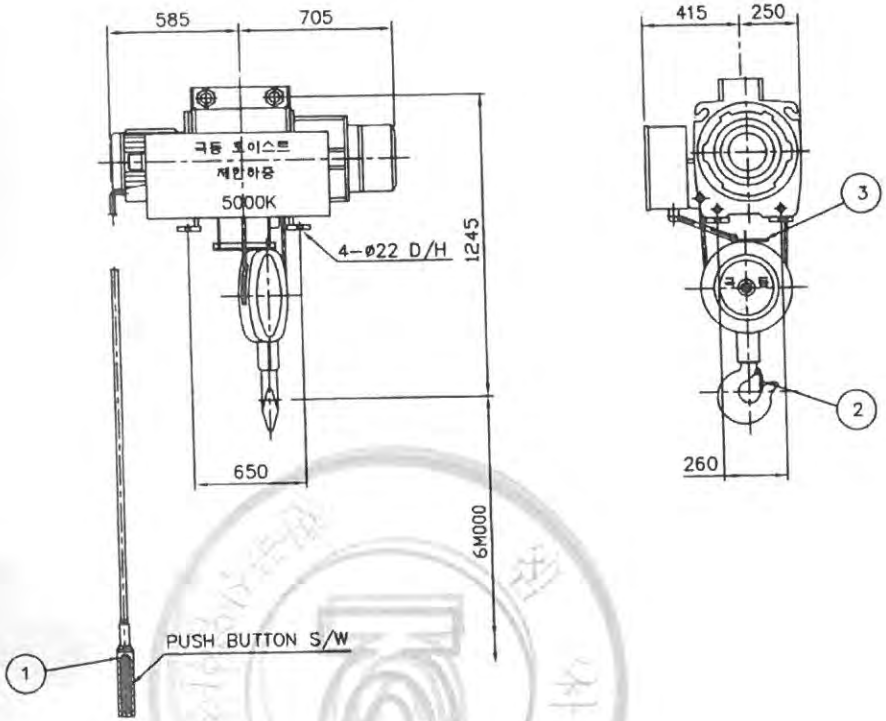


| SPECIFICATION | | | |
|---|---|---|---|
| RATED LOAD | | | 5000 KG |
| TESTING LOAD | | | 6250 KG |
| LIFT | | | 12 M |
| RATING | | | 30 MIN |
| HOISTING | H-HIGH | SPEED | 8.4 M/MIN |
| | | MOTOR | 8.5 KW x 4 P |
| | HIGH | SPEED | 5.6 M/MIN |
| | | MOTOR | 5.5 KW x 6 P |
| | LOW | SPEED | 4.2 M/MIN |
| | | MOTOR | 4.2 KW x 8 P |
| WIRE ROPE | | | (6x37) ø16 x 2 FALLS |
| POWER SOURCE | | | AC3ø 220V(380,440,460,480)V 60Hz |
| COLOR | | | 10 B 3/5 |
| WEIGHT | | | 525 KG |

| NO. | DESCRIPTIONS | MT'L | SET QT'Y | SET QT'Y | UNIT WEIGHT KG. | TOTAL WEIGHT KG. | REAMERKS |
|---|---|---|---|---|---|---|---|
| 5 | | | | | | | |
| 4 | | | | | | | |
| 3 | UPPER LIMIT S/W | SS41 | | 1 | | | |
| 2 | SAFETY LATCH | SPC | | 1 | | | |
| 1 | EMERGENCY S/W | — | | 1 | | | |

| | | | | |
|---|---|---|---|---|
| PROJECT | | | | DATE 20 . . . |
| TITLE | KD5 - L12 - S<br>ARRANGEMENT DRAWING FOR HOIST | | | SCALE A3/20 / |
| DRAWN | DESIGNED | CHECKED | APPROVED | REF DRAWING |
| | | | | |
| 국동호이스트 주식회사<br>KUK DONG HOIST CO., LTD. | | | SHEET NO. | DRAWING NO. KD5S1200 |

불법복제 및 배포금지
무단복제 및 배포금지

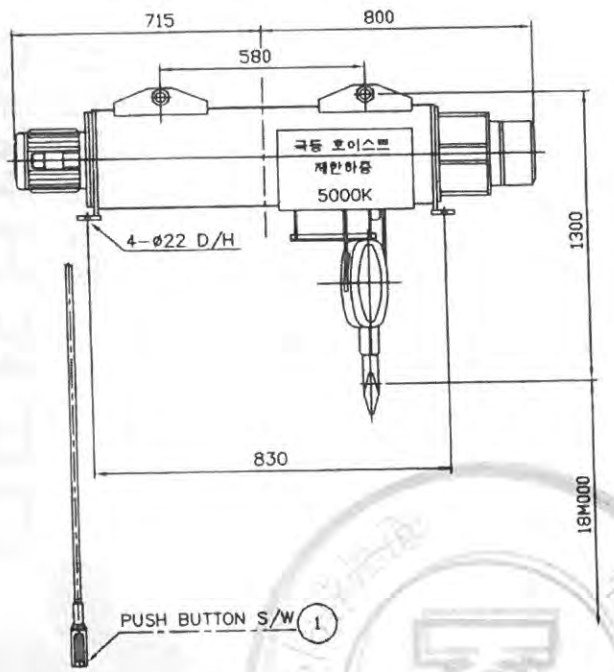


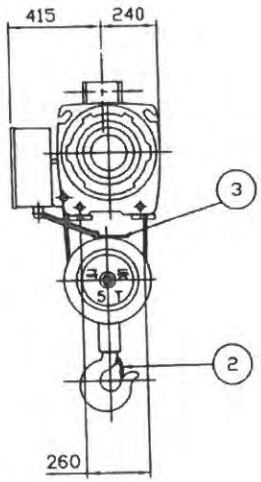


| SPECIFICATION | | | |
|---|---|---|---|
| RATED LOAD | | 5000 | KG |
| TESTING LOAD | | 6250 | KG |
| LIFT | | 18 | M |
| RATING | | 30 | MIN |
| HOISTING | H-HIGH | SPEED | 8.4 M/MIN |
| | | MOTOR | 8.5 KW x 4 P |
| | HIGH | SPEED | 5.6 M/MIN |
| | | MOTOR | 5.5 KW x 6 P |
| | LOW | SPEED | 4.2 M/MIN |
| | | MOTOR | 4.2 KW x 8 P |
| WIRE ROPE | | (6x37) ø16 x 2 FALLS | |
| POWER SOURCE | | AC3ø 220V(380,440,460,480)V 60Hz | |
| COLOR | | 10 B 3/5 | |
| WEIGHT | | 630 | KG |

| NO. | DESCRIPTIONS | MT'L | SET QT'Y | SET QT'Y | UNIT WEIGHT KG. | TOTAL WEIGHT KG. | REAMERKS |
|---|---|---|---|---|---|---|---|
| 4 | | | | | | | |
| 3 | UPPER LIMIT S/W | SS400 | | 1 | | | |
| 2 | SAFETY LATCH | SPC | | 1 | | | |
| 1 | EMERGENCY S/W | — | | 1 | | | |

| | | | | |
|---|---|---|---|---|
| PROJECT | | | | DATE 20 . . . |
| TITLE | KD5 - L18 - S<br>ARRANGEMENT DRAWING FOR HOIST | | | SCALE A3/20 / |
| DRAWN | DESIGNED | CHECKED | APPROVED | REF DRAWING |
| 극동호이스트 주식회사<br>KUK DONG HOIST CO., LTD. | | | SHEET NO. | DRAWING NO. KD5S1800 |

불법복제 및 배포금지
불법복제 및 배포금지

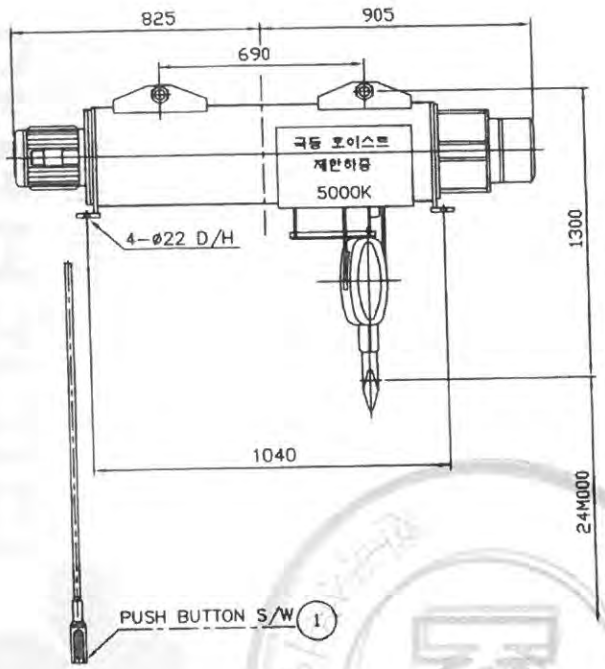


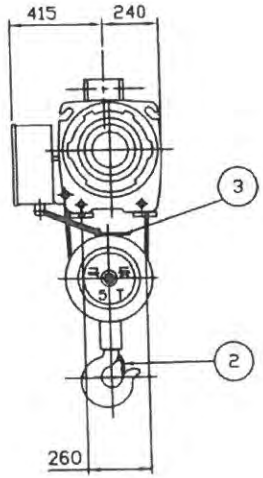


| SPECIFICATION | | | |
|---|---|---|---|
| RATED LOAD | | 5000 | KG |
| TESTING LOAD | | 6250 | KG |
| LIFT | | 24 | M |
| RATING | | 30 | MIN |
| HOISTING | H-HIGH | SPEED | 8.4 M/MIN |
| | | MOTOR | 8.5 KW x 4 P |
| | HIGH | SPEED | 5.6 M/MIN |
| | | MOTOR | 5.5 KW x 6 P |
| | LOW | SPEED | 4.2 M/MIN |
| | | MOTOR | 4.2 KW x 8 P |
| WIRE ROPE | | (6x37) ø16 x 2 FALLS | |
| POWER SOURCE | | AC3ø 220V(380,440,460,480)V 60Hz | |
| COLOR | | 10 B 3/5 | |
| WEIGHT | | 686 | KG |

| NO. | DESCRIPTIONS | MT'L | SET QT'Y | SET QT'Y | UNIT WEIGHT KG. | TOTAL WEIGHT KG. | REAMERKS |
|---|---|---|---|---|---|---|---|
| 4 | | | | | | | |
| 3 | UPPER LIMIT S/W | SS400 | | 1 | | | |
| 2 | SAFETY LATCH | SPC | | 1 | | | |
| 1 | EMERGENCY S/W | — | | 1 | | | |

| | | | | |
|---|---|---|---|---|
| PROJECT | | | | DATE 20 . . . |
| TITLE | KD5 - L24 - S<br>ARRANGEMENT DRAWING FOR HOIST | | | SCALE A3/20 / |
| DRAWN | DESIGNED | CHECKED | APPROVED | REF DRAWING |
| | | | | |
| 극동호이스트 주식회사<br>KUK DONG HOIST CO., LTD. | | | SHEET NO. | DRAWING NO. KD5S2400 |

불법복제 및 배포금지
불법복제 및 배포금지

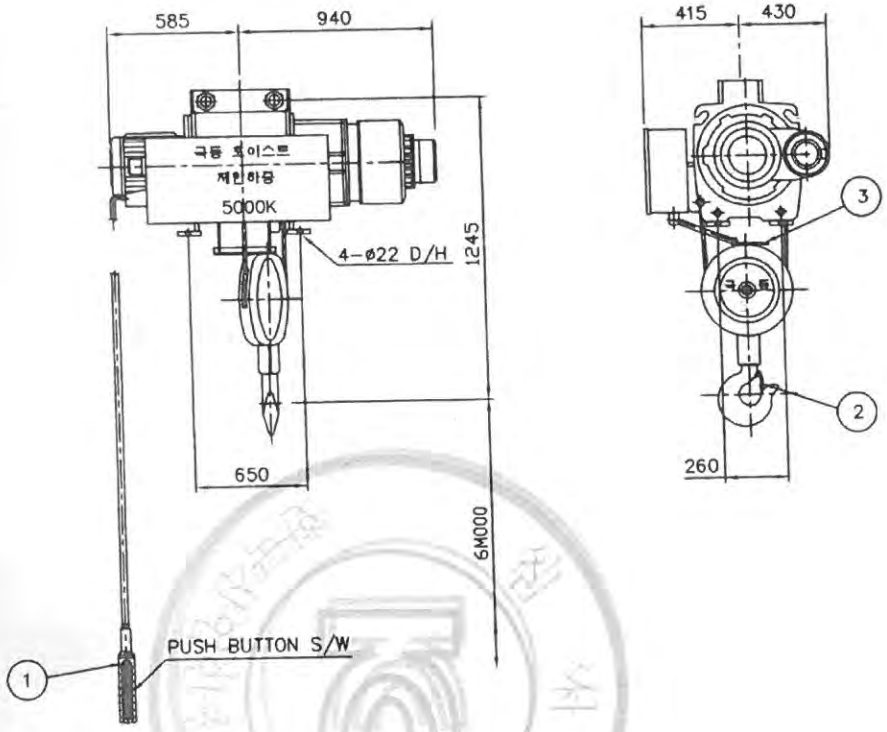


| SPECIFICATION | | |
|---|---|---|
| RATED LOAD | | 5000 KG |
| TESTING LOAD | | 6250 KG |
| LIFT | | 12 M |
| RATING | | 30 MIN |
| HOISTING | SPEED | 5.6 / 0.56 M/MIN |
| | MOTOR | 5.5 / 1.0 KW x 6 P |
| WIRE ROPE | | (6x37) ø16 x 2 FALLS |
| POWER SOURCE | | AC3ø 220V(380,440,460,480)V 60Hz |
| COLOR | | 10 B 3/5 |
| WEIGHT | | 585 KG |

| NO. | DESCRIPTIONS | MT'L | SET QT'Y | SET QT'Y | UNIT WEIGHT KG. | TOTAL WEIGHT KG. | REAMERKS |
|---|---|---|---|---|---|---|---|
| 5 | | | | | | | |
| 4 | | | | | | | |
| 3 | UPPER LIMIT S/W | SS41 | | 1 | | | |
| 2 | SAFETY LATCH | SPC | | 1 | | | |
| 1 | EMERGENCY S/W | — | | 1 | | | |

| | | | | |
|---|---|---|---|---|
| PROJECT | | | | DATE 20 . . . |
| TITLE | KDC5 - L12 - S<br>ARRANGEMENT DRAWING FOR HOIST | | | SCALE A3/20 / |
| DRAWN | DESIGNED | CHECKED | APPROVED | REF DRAWING |
| | | | | |
| 국동호이스트 주식회사<br>KUK DONG HOIST CO., LTD. | | | SHEET NO. | DRAWING NO. KDC5S1200 |

무단배포 및 재생산 금지

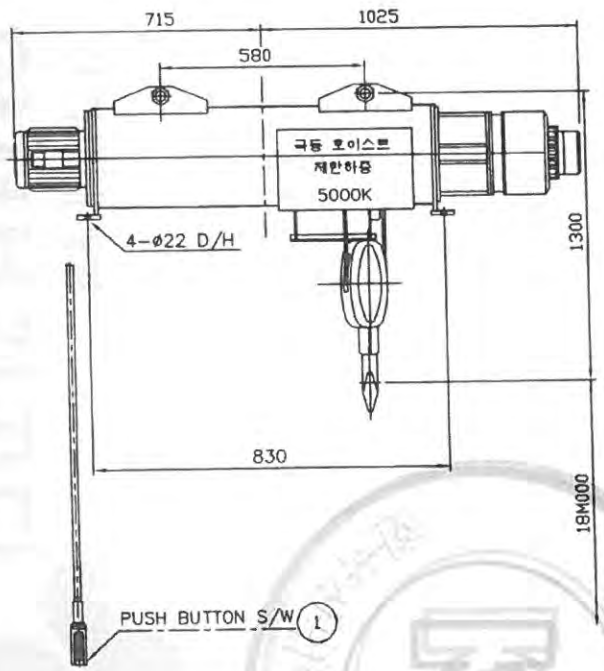


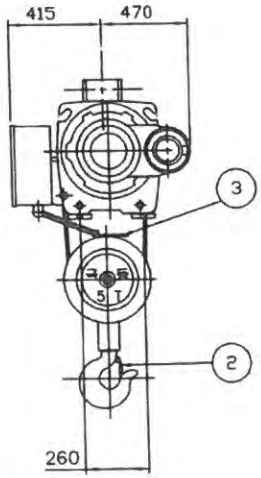


| SPECIFICATION | | |
|---|---|---|
| RATED LOAD | | 5000 KG |
| TESTING LOAD | | 6250 KG |
| LIFT | | 18 M |
| RATING | | 30 MIN |
| HOISTING | SPEED | 5.6 / 0.56 M/MIN |
| | MOTOR | 5.5 / 1.0 KW x 6 P |
| WIRE ROPE | | (6x37) ø16 x 2 FALLS |
| POWER SOURCE | | AC3ø 220V(380,440,460,480)V 60Hz |
| COLOR | | 10 B 3/5 |
| WEIGHT | | 690 KG |

| NO. | DESCRIPTIONS | MT'L | SET QT'Y | SET QT'Y | UNIT WEIGHT KG. | TOTAL WEIGHT KG. | REAMERKS |
|---|---|---|---|---|---|---|---|
| 4 | | | | | | | |
| 3 | UPPER LIMIT S/W | SS400 | | 1 | | | |
| 2 | SAFETY LATCH | SPC | | 1 | | | |
| 1 | EMERGENCY S/W | — | | 1 | | | |

| | | | | |
|---|---|---|---|---|
| PROJECT | | | | DATE 20 . . . |
| TITLE | KDC5 - L18 - S<br>ARRANGEMENT DRAWING FOR HOIST | | | SCALE A3/20 / |
| DRAWN | DESIGNED | CHECKED | APPROVED | REF DRAWING |
| | | | | |
| 극동호이스트 주식회사<br>KUK DONG HOIST CO., LTD. | | | SHEET NO. | DRAWING NO. KDC5S1800 |

불법복제 및 배포금지
불법복제 및 배포금지

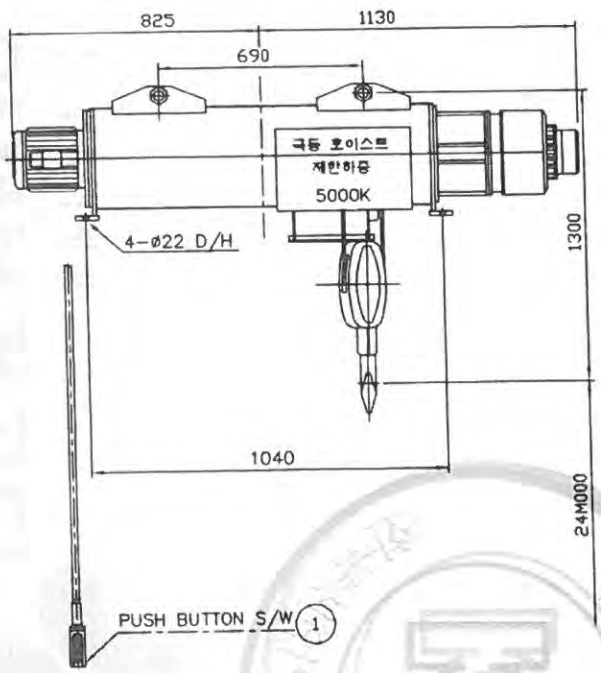


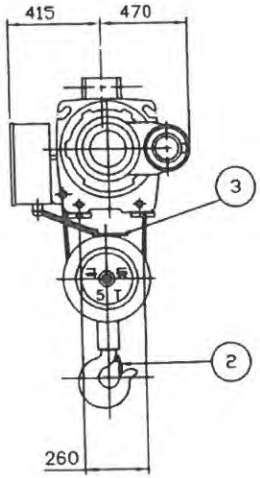


| SPECIFICATION | | |
|---|---|---|
| RATED LOAD | | 5000 KG |
| TESTING LOAD | | 6250 KG |
| LIFT | | 24 M |
| RATING | | 30 MIN |
| HOISTING | SPEED | 5.6 / 0.56 M/MIN |
| | MOTOR | 5.5 / 1.0 KW x 6 P |
| WIRE ROPE | | (6x37) ø16 x 2 FALLS |
| POWER SOURCE | | AC3ø 220V(380,440,460,480)V 60Hz |
| COLOR | | 10 B 3/5 |
| WEIGHT | | 750 KG |

| NO. | DESCRIPTIONS | MT'L | SET QT'Y | SET QT'Y | UNIT WEIGHT KG. | TOTAL WEIGHT KG. | REAMERKS |
|---|---|---|---|---|---|---|---|
| | | | | | | | |
| 4 | | | | | | | |
| 3 | UPPER LIMIT S/W | SS400 | | 1 | | | |
| 2 | SAFETY LATCH | SPC | | 1 | | | |
| 1 | EMERGENCY S/W | — | | 1 | | | |

| | | | | |
|---|---|---|---|---|
| PROJECT | | | | DATE 20 . . . |
| TITLE | KDC5 - L24 - S<br>ARRANGEMENT DRAWING FOR HOIST | | | SCALE A3/20 / |
| DRAWN | DESIGNED | CHECKED | APPROVED | REF DRAWING |
| | | | | |
| 극동호이스트 주식회사<br>KUK DONG HOIST CO., LTD. | | | SHEET NO. | DRAWING NO. KDC5S2400 |

불법복제 및 배포금지
불법복제 및 배포금지

불법복제 및 배포금지
불법복제 및 배포금지

# 2) 전　　기

불법복제 및 배포금지
불법복제 및 배포금지

### ▣ 보호본딩회로의 연속성 확인

| 시험전선의 최소유효 단면적(㎟) | 최고 전압 강하(V) |
|---|---|
| 1.0 | 3.3 |
| 1.5 | 2.6 |
| 2.5 | 1.9 |
| 4.0 | 1.4 |
| >6.0 | 1.0 |

①보호본딩회로의 연속성의 검증은 PELV전원(50/60Hz)에서 최소 10A 이상의 전류를 10초 이상의 인가에 의한다. 시험은 PE단자와 보호본딩회로의 여러지점 사이에서 이루어진다.

②PE단자와 시험 지점 사이에서 측정된 전압은(표 참조) 값을 초과 해서는 아니된다.

### ▣ 절연저항 시험

전원선과 보호본딩선 사이를 직류 500V로 측정한 절연저항 값은 1MΩ 이상이어야 한다.

### ▣ 내전압 시험

①PELV 전압에서 작동되도록 설계된 전기장치의 회로를 제외한 모든 회로와 보호본딩회로의 전선 사이에 1초 이상 지속되는 다음의 시험 전압에 견딜수 있어야 한다.

- 장치의 정격전압의 두배 또는 1,000V 중 큰값의 전압

②이 시험을 견딜수 없도록 설계된 부품은 시험이 진행되기 전에 차단하여야 한다.

불법복제 및 배포금지
불법복제 및 배포금지

* MAIN POWER : AC 3PH 220V,380V,440V,460V,480 60Hz (LIFT 6, 9, 12, 18, 24, 30, 36, 40M)

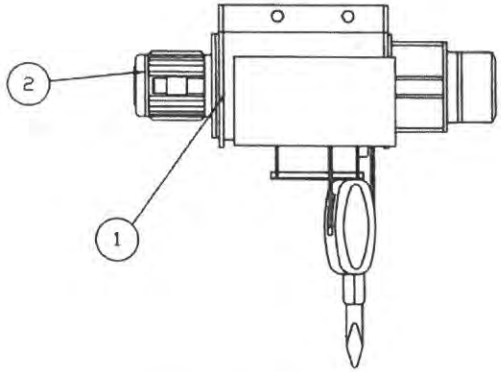


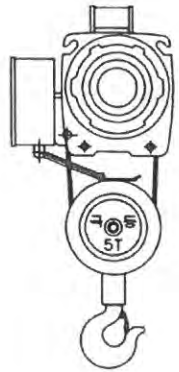


1

| KD ELECTRIC WIRE ROPE HOIST | | | |
|---|---|---|---|
| MODEL | | RATING | min |
| CAPACITY | Kg | LIFT | m |
| HOIST SPEED | m/min | POWER SOURCE | V Hz |
| HOIST MOTOR | Kw P | AMP.S R&T HOIST | A |
| TRAV.SPEED | m/min | AMP.S R&T TRAV. | A |
| TRAV.MOTOR | Kw P | WIRE ROPE | Ø |
| WIDTH OF RAIL | mm | WEIGET | Kg |
| DATE | | SERIAL | |
| KUKDONG HOIST CO.,LTD | | | |

2

| KD 3 PHASE INDUCTION MOTOR | | | |
|---|---|---|---|
| KW | P | TYPE | TENV |
| VOLTS | V | RATING | min |
| AMP.S | A | AMP.TEMP | 40℃ |
| HEARTS | | INS.CLASS | F |
| R.P.M | | BEARING | |
| ROTOR | C | BEARING | |
| SERIAL. | | DATE | |
| KUKDONG HOIST CO.,LTD | | | |

| MK | DATE | REVISIONS | CHK. | APP. |
|---|---|---|---|---|
| 4 | | | | |
| 3 | | | | |
| 2 | | | | |
| 1 | | | | |

| CUSTOMER | | DRAWING | DESIGN | CHECKED | APPROVED | SCALE | DATE | ORDER NO. |
|---|---|---|---|---|---|---|---|---|
| DRAWING TITLE | WIRE HOIST NAME PLATE | | | | | NONE | | |
| | | KD 국동호이스트 주식회사 KUK DONG HOIST CO., LTD. | | | | DWG. NO | KD5E0601 | |

| NO | DESCRIPTION | CABLE SIZE |
|---|---|---|
| 1 | MAIN EARTH LINE | USER SCOPE |
| 2 | HOIST POWER SOURCE WITH EARTH | VFCT 10(6.0)SQ x 1C |
| 3 | HOISTING MOTOR WITH EARTH | VCT 10(6.0)SQ x 1C |

* CV CABLE 4C중 1C는 EARTH로 사용함.

- NOTE -

1. 전동기 외함, 제어반의 프레임 등은 접지하여 그 접지 저항은

400V 미만 : 100오옴 이하일것.(3종 접지)
400V 이상 : 10오옴 이하일것.(특 3종접지)

2. MAIN S/W BOX는 3종 접지 요.

**등전위접지**

1.전기장비와 기계의 노출된 모든 도전부는 보호본딩회로에 연결되어야 하며 적절한 접지연속성 기능이 유지되야함.

2. 보호본딩회로에는 개폐기, 과전류보호장치가 부착되지 않아야 한다.

| 시험대상 전선의 최소 유효단면적 | 최고전압강하(V) |
|---|---|
| 1.0 | 3.3 |
| 1.5 | 2.6 |
| 2.5 | 1.6 |
| 4.0 | 1.4 |
| >6.0 | 1.0 |

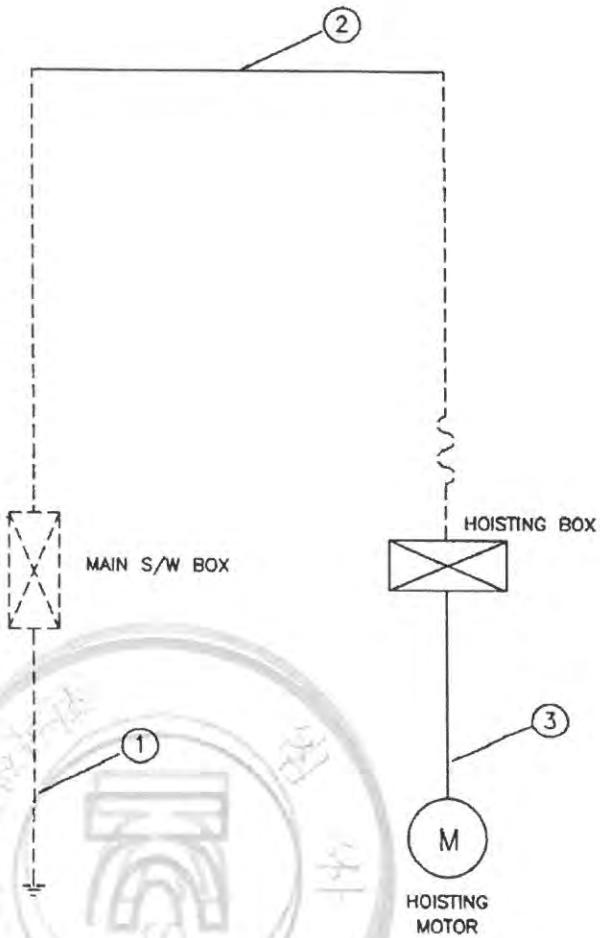


---------- USER SCOPE

———— KUKDONG SCOPE

| MK | DATE | REVISIONS | CHK. | APP. |
|---|---|---|---|---|
| 4 | | | | |
| 3 | | | | |
| 2 | | | | |
| 1 | | | | |

| CUSTOMER | | DRAWING | DESIGN | CHECKED | APPROVED | SCALE | DATE | ORDER NO. |
|---|---|---|---|---|---|---|---|---|
| DRAWING TITLE | EARTH DETAILS DRAWING | | | | | NONE | 2003.07.01 | |
| | | 극동호이스트 주식회사 KUK DONG HOIST CO., LTD. | | | | DWG. NO | KD5S-EC000 | |

불법복제 및 배포금지
상업용 및 배포금지

| 1 | 3 | 4 | 5 | 6 | 7 | 8 | 9 | 10 | 11 | 12 | 13 | 14 | 15 | 16 | 17 | 19 | 20 |
|---|---|---|---|---|---|---|---|---|---|---|---|---|---|---|---|---|---|

POWER CIRCUIT

TRAVELLING POWER SUPPLY SYSTEM

ADR'S NO. A1

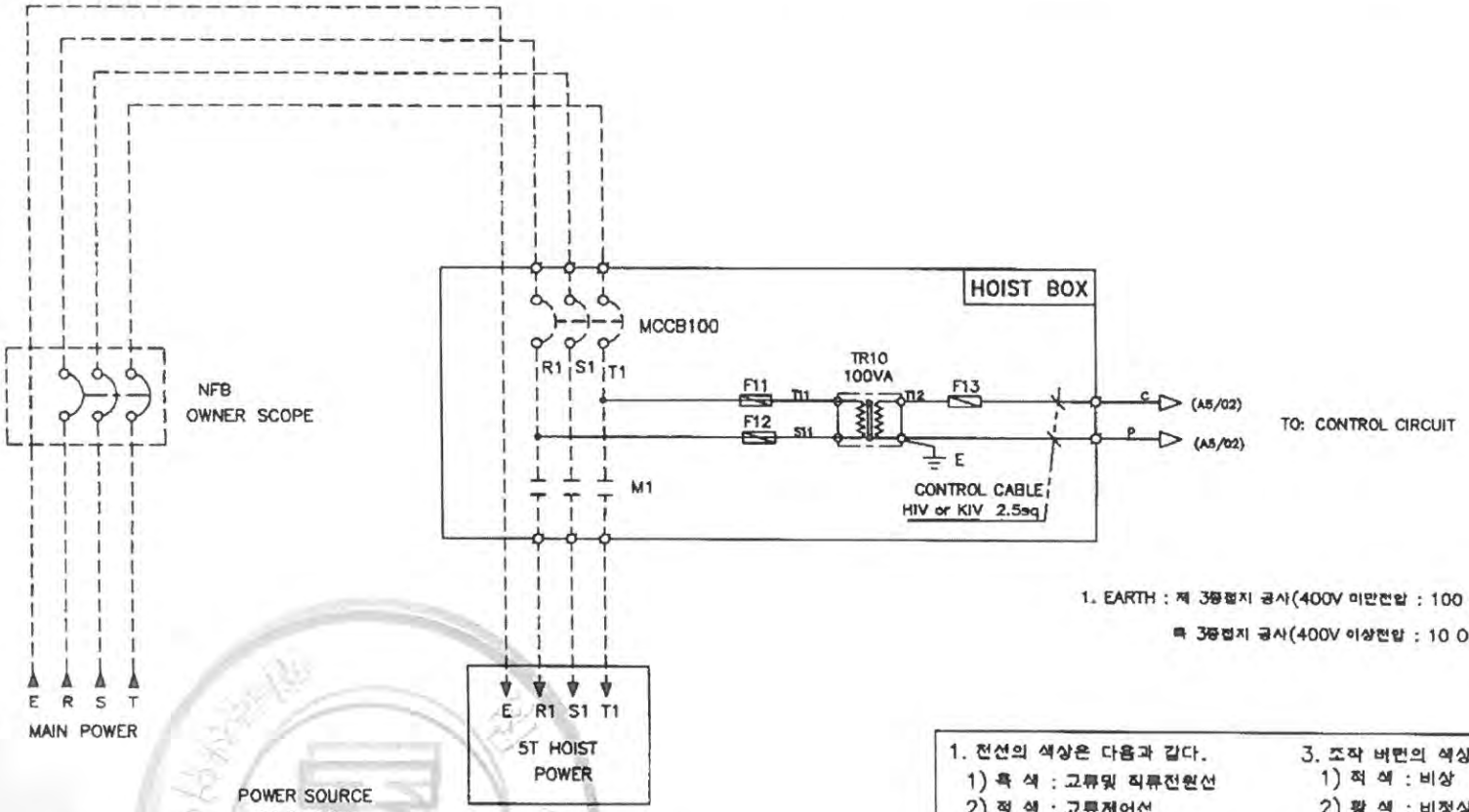


1. EARTH : 제 3종접지 공사(400V 미만전압 : 100 OHM 이하)

특 3종접지 공사(400V 이상전압 : 10 OHM 이하)

POWER SOURCE
AC 3ø 60Hz

| SELECTION | VOLTAGE | F11 F12 | F13 | MCCB100 | TR10 |
|---|---|---|---|---|---|
| | 220V | 2A | 3A | 53AF/50AT | 220/110,120V 100VA |
| | 380V | 1A | 3A | 53AF/40AT | 220/110,120V 100VA |
| | 440V | 1A | 3A | 33AF/30AT | 220/110,120V 100VA |
| | 460V | 1A | 3A | 33AF/30AT | 220/110,120V 100VA |
| | 480V | 1A | 3A | 33AF/30AT | 220/110,120V 100VA |

1. 전선의 색상은 다음과 같다.
   1) 흑 색 : 고류및 직류전원선
   2) 적 색 : 고류제어선
   3) 청 색 : 직류제어선
   4) 녹색 또는 녹색과 황색 혼용 : 접지
2. 표시등의 색상은 다음과 같다.
   1) 적 색 : 비상
   2) 황 색 : 비정상
   3) 녹 색 : 정상
   4) 청색 : 의무
   5) 흰색 : 중립
3. 조작 버튼의 색상은 다음과 같다.
   1) 적 색 : 비상
   2) 황 색 : 비정상
   3) 청 색 : 의무
   4) 흰색, 회색 또는 흑색 : 지정된 의미없음

| MK | DATE | REVISIONS | CHK. | APP. |
|---|---|---|---|---|
| | | | | |

| CUSTOMER | | DRAWING | DESIGN | CHECKED | APPROVED | SCALE | DATE | ORDER NO. |
|---|---|---|---|---|---|---|---|---|
| DRAWING TITLE | MAIN POWER CIRCUIT 1 | | | | | NONE | | |
| | DIAGRAM | 극동호이스트 주식회사 KUK DONG HOIST CO., LTD. | | | | DWG. NO | KD5E001 | |

사용금지 및 배포금지

| 1 | 3 | 4 | 5 | 6 | 7 | 8 | 9 | 11 | 12 | 13 | 14 | 15 | 16 | 17 | 19 | 20. |
|---|---|---|---|---|---|---|---|---|---|---|---|---|---|---|---|---|

ADR'S NO.

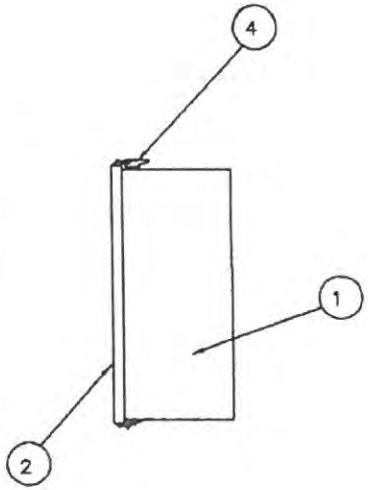


| NO | DESCRIPTION | MT'L | REMARKS |
|---|---|---|---|
| 1 | PANEL CASE | SPC | 1.6t |
| 2 | PANEL COVER | SPC | 1.6t |
| 3 | HINGE | PUR' | |
| 4 | CLAMP | PUR' | |
| 5 | SPONGE | PUR' | |

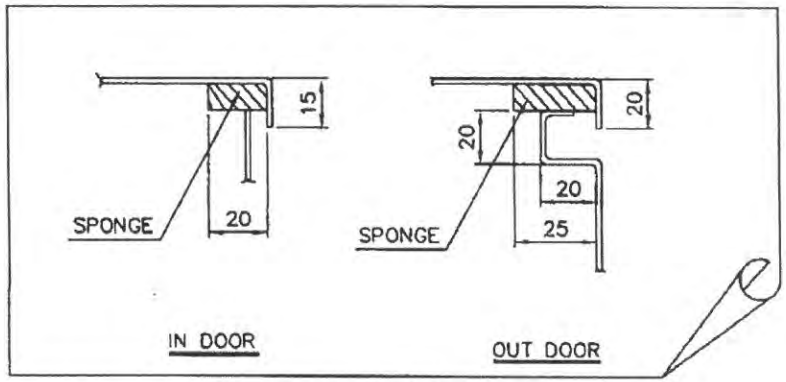


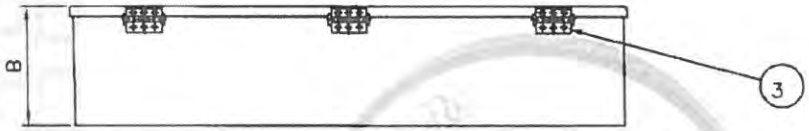


N O T E

1.PROTECTION DEGREE ;

A, INDOOR TYPE : DUST PROOF

B, OUT DOOR TYPE : SPLASH PROOF

2.FINAL PAINTING COLOR (MUNSELL NO.)

A. IN SIDE : 10B 3/5

B. OUT SIDE : 10B 3/5

3.PAINTING THICKNESS : ABOVE 40 um

4.APPLICATION VOLTAGE : 220V,380V,440V,460V,480V

5.제어용 전선 : 2.5sq KIV,HIV

6.외함 개방 구조는 다음과 같다.

1) 외함 개방시 충전 부분이 차단되도록 한다.

2) 외함 개방 후 충전되어있는 부분은 IP2X 이상의 직접 접촉 방호가 되어있을것.

| SELECTION | HOIST CAPACITY | DESCRIPTION | IN DOOR | | | OUT DOOR | | | REMARK |
|---|---|---|---|---|---|---|---|---|---|
| | | | A | B | L | A | B | L | |
| ☞ | 5 TON | NORMAL | 360 | 170 | 790 | 360 | 170 | 810 | |
| | | CREEP | 360 | 170 | 790 | 360 | 170 | 810 | |

| MK | DATE | REVISIONS | CHK. | APP. |
|---|---|---|---|---|
| 4 | | | | |
| 3 | | | | |
| 2 | | | | |
| 1 | | | | |

| | | | | | | |
|---|---|---|---|---|---|---|
| CUSTOMER | | DRAWING | DESIGN | CHECKED | APPROVED | SCALE | DATE | ORDER NO. |
| DRAWING TITLE | HOISTING CONTROL BOX | | | | | NONE | | |
| | LAY-OUT | 극동호이스트 주식회사 KUK DONG HOIST CO., LTD. | | | | DWG. NO | KD5EB00 | |

무단복제 및 배포금지

불법복제 및 배포금지
불법복제 및 배포금지

ADR'S NO.

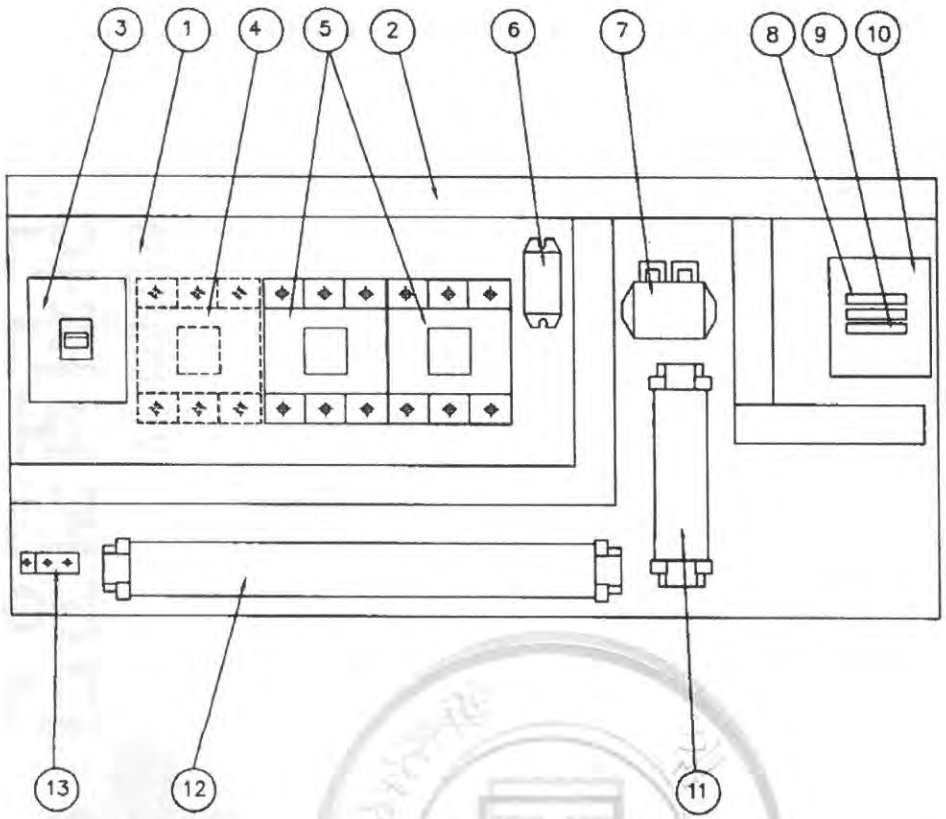


| NO | DESCRIPTION | SPECIFICATION | Q'TY | REMARK |
|---|---|---|---|---|
| 1 | CHASSIS PLATE | | 1 | 아 연 도 금 |
| 2 | CABLE DUCT | – | 1 | |
| 3 | N.F.B | 53AF/50AT | 1 | HOISTING |
| 4 | MAGNET CONTACTOR | DMC48C | 1 | MAIN MAG. |
| 5 | MAGNET CONTACTOR | DMC85C | 2 | HOISTING |
| 6 | SILICON RECTIFIER | SR-60 | 1 | HOISTING |
| 7 | E.O.C.R | SS-30 | 1 | HOISTING |
| 8 | FUSE | 2 A | 2 | |
| 9 | FUSE | 3 A | 1 | |
| 10 | TRANSFORMER | 220V/110V,120V, 100VA | 1 | |
| 11 | UPPER LIMIT | AC 600V/75A | 1 | |
| 12 | TERMINAL BLOCK | 60A,15A | | |
| 13 | EARTH TERMINAL | 3tx20x50 | 1 | |

N O T E

1. UPPER LIMIT LS-1,LS-2의 접점 허용 전류 용량. : AC 600V, 75A
2. POWER SOURCE : AC. 3ø 220V 60HZ
3. EARTH TERMINAL RESISTANCE : 0.018 Ω

NOTE 1. 전선의 색상은 다음과 같다.
1) 흑색 : 고류및 직류 전원선
2) 적색 : 고류제어선
3) 청색 : 직류제어선
4) 녹색 또는 녹색과 노랑 혼용 : 접지선
2. CABLE MATERIAL : KIV OR EQUIVALENT
MIN SIZE : 2.5sq
3. 제어용 전선 : 2.5mm KIV,HIV
4. 제작시 다소 변경 될수있음.
5. 외함 개방구조는 다음과 같을것.
1) 외함 개방시 충전부분이 차단되도록 할것.
2) 외함 개방후 충전되어있는 부분은 IP2X 이상의 직접 접촉 방호가 되어있을것.

| MK | DATE | REVISIONS | CHK. | APP. |
|---|---|---|---|---|
| ⚠ | | | | |
| ⚠ | | | | |
| ⚠ | | | | |
| ⚠ | | | | |

| CUSTOMER | | DRAWING | DESIGN | CHECKED | APPROVED | SCALE | DATE | ORDER NO. |
|---|---|---|---|---|---|---|---|---|
| DRAWING TITLE | HOIST CONTROL BOX (초고속) | | | | | NONE | | |
| | ARRANGEMENT DRAWING | KD 국동호이스트 주식회사 KUK DONG HOIST CO., LTD. | | | | DWG. NO | KD5BA20S | |

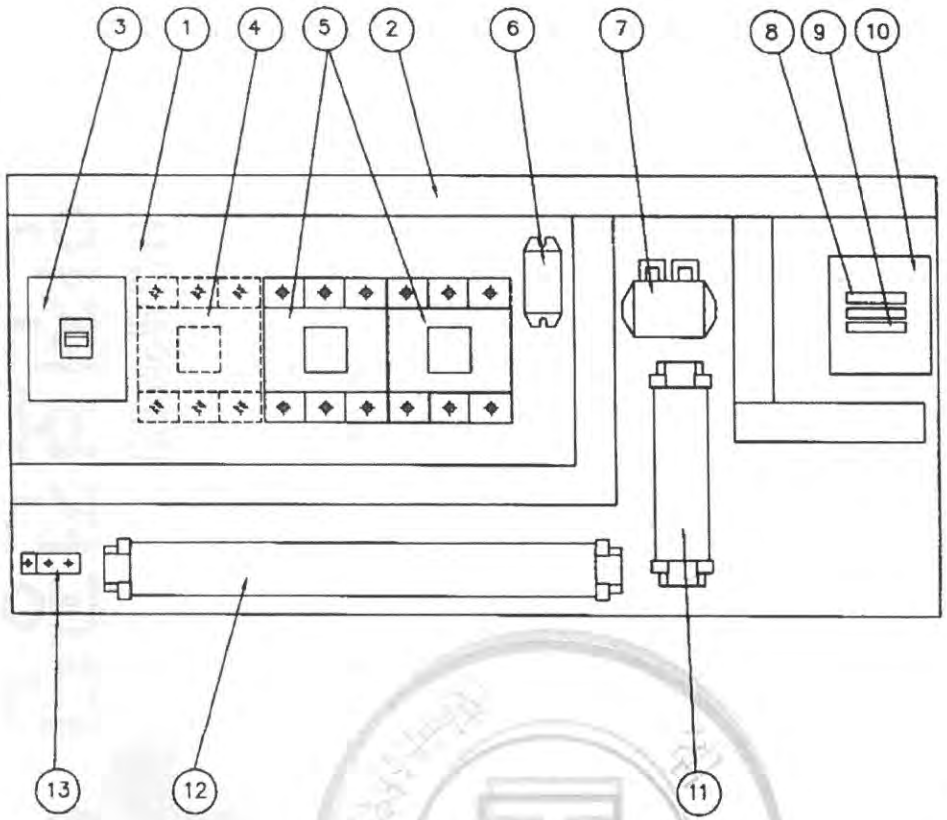


| NO | DESCRIPTION | SPECIFICATION | Q'TY | REMARK |
|---|---|---|---|---|
| 1 | CHASSIS PLATE | | 1 | 아 연 도 금 |
| 2 | CABLE DUCT | – | 1 | |
| 3 | N.F.B | 53AF/40AT | 1 | HOISTING |
| 4 | MAGNET CONTACTOR | DMC48C | 1 | MAIN MAG. |
| 5 | MAGNET CONTACTOR | DMC65C | 2 | HOISTING |
| 6 | SILICON RECTIFIER | SR-60 | 1 | HOISTING |
| 7 | E.O.C.R | SS-30 | 1 | HOISTING |
| 8 | FUSE | 2 A | 2 | |
| 9 | FUSE | 3 A | 1 | |
| 10 | TRANSFORMER | 220V/110V,120V, 100VA | 1 | |
| 11 | UPPER LIMIT | AC 600V/75A | 1 | |
| 12 | TERMINAL BLOCK | 60A,15A | | |
| 13 | EARTH TERMINAL | 3tx20x50 | 1 | |

NOTE

1. UPPER LIMIT LS-1,LS-2의 접점 허용 전류 용량. : AC 600V, 75A
2. POWER SOURCE : AC. 3ø 220V 60HZ
3. EARTH TERMINAL RESISTANCE : 0.018 Ω

NOTE

1. 전선의 색상은 다음과 같다.
   1) 흑색 : 교류및 직류 전원선
   2) 적색 : 교류제어선
   3) 청색 : 직류제어선
   4) 녹색 또는 녹색과 노랑 혼용 : 접지선
2. CABLE MATERIAL : KIV OR EQUIVALENT
   MIN SIZE : 2.5sq
3. 제어용 전선 : 2.5mm KIV,HIV
4. 제작시 다소 변경 될수있음.
5. 외함 개방구조는 다음과 같을것.
   1) 외함 개방시 충전부분이 차단되도록 할것.
   2) 외함 개방후 충전되어있는 부분은 IP2X 이상의 직접 접촉 방호가 되어있을것.

| MK | DATE | REVISIONS | CHK. | APP. |
|---|---|---|---|---|
| | | | | |
| | | | | |
| | | | | |
| | | | | |

| CUSTOMER | | DRAWING | DESIGN | CHECKED | APPROVED | SCALE | DATE | ORDER NO. |
|---|---|---|---|---|---|---|---|---|
| DRAWING TITLE | HOIST CONTROL BOX (고속) | | | | | NONE | | |
| | ARRANGEMENT DRAWING | 극동호이스트 주식회사 KUK DONG HOIST CO., LTD. | | | | DWG. NO | KD5BA21S | |

불법복제 및 배포금지
불법복제 및 배포금지

불법복제 및 배포금지
상표권 및 저작권 등 법적 보호대상

ADR'S NO.

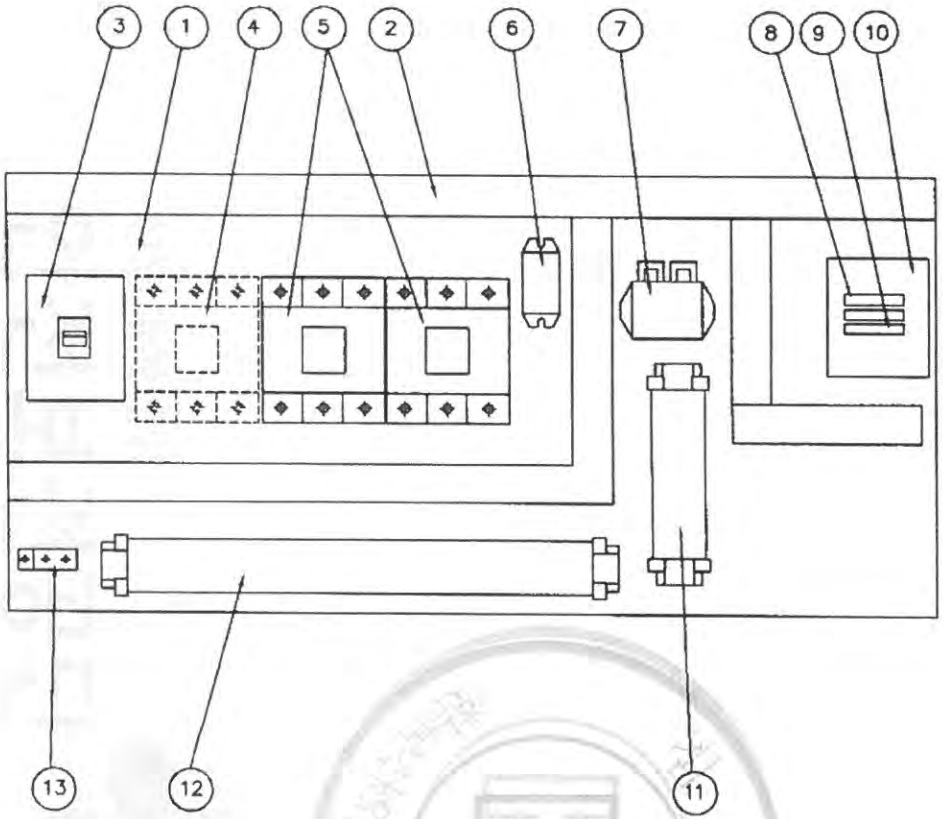


| NO | DESCRIPTION | SPECIFICATION | Q'TY | REMARK |
|---|---|---|---|---|
| 1 | CHASSIS PLATE | | 1 | 이 연 도 금 |
| 2 | CABLE DUCT | – | 1 | |
| 3 | N.F.B | 53AF/40AT | 1 | HOISTING |
| 4 | MAGNET CONTACTOR | DMC48C | 1 | MAIN MAG. |
| 5 | MAGNET CONTACTOR | DMC65C | 2 | HOISTING |
| 6 | SILICON RECTIFIER | SR-60 | 1 | HOISTING |
| 7 | E.O.C.R | SS-30 | 1 | HOISTING |
| 8 | FUSE | 2 A | 2 | |
| 9 | FUSE | 3 A | 1 | |
| 10 | TRANSFORMER | 220V/110V,120V, 100VA | 1 | |
| 11 | UPPER LIMIT | AC 600V/75A | 1 | |
| 12 | TERMINAL BLOCK | 60A,15A | | |
| 13 | EARTH TERMINAL | 3tx20x50 | 1 | |

N O T E

1. UPPER LIMIT LS-1,LS-2의 접점 허용 전류 용량. : AC 600V, 75A
2. POWER SOURCE : AC. 3ø 220V 60HZ
3. EARTH TERMINAL RESISTANCE : 0.018 Ω

NOTE 1. 전선의 색상은 다음과 같다.
1) 흑색 : 고류및 직류전원선
2) 적색 : 고류제어선
3) 청색 : 직류제어선
4) 녹색 또는 녹색과 노랑 혼용 : 접지선
2. CABLE MATERIAL : KIV OR EQUIVALENT, MIN SIZE : 2.5sq
3. 제어용 전선 : 2.5mm KIV,HIV
4. 제작시 다소 변경 될수있음.
5. 외함 개방구조는 다음과 같을것.
1) 외함 개방시 충전부분이 차단되도록 할것.
2) 외함 개방후 충전되어있는 부분은 IP2X 이상의 직접 접촉 방호가 되어있을것.

| MK | DATE | REVISIONS | CHK. | APP. |
|---|---|---|---|---|
| ⚠ | | | | |
| ⚠ | | | | |
| ⚠ | | | | |
| ⚠ | | | | |

| CUSTOMER | | DRAWING | DESIGN | CHECKED | APPROVED | SCALE | DATE | ORDER NO. |
|---|---|---|---|---|---|---|---|---|
| DRAWING TITLE | HOIST CONTROL BOX (저속) | | | | | NONE | | |
| | ARRANGEMENT DRAWING | KD 극동호이스트 주식회사 KUK DONG HOIST CO., LTD. | | | | DWG. NO | KD5BA22S | |

| 1 | 2 | 3 | 4 | 5 | 6 | 7 | 8 | 9 | 10 | 11 | 12 | 13 | 14 | 15 | 16 | 17 | 18 | 19 | 20 |
|---|---|---|---|---|---|---|---|---|---|---|---|---|---|---|---|---|---|---|---|

POWER CIRCUIT

HOISTING MOTION

ADR'S NO. B1

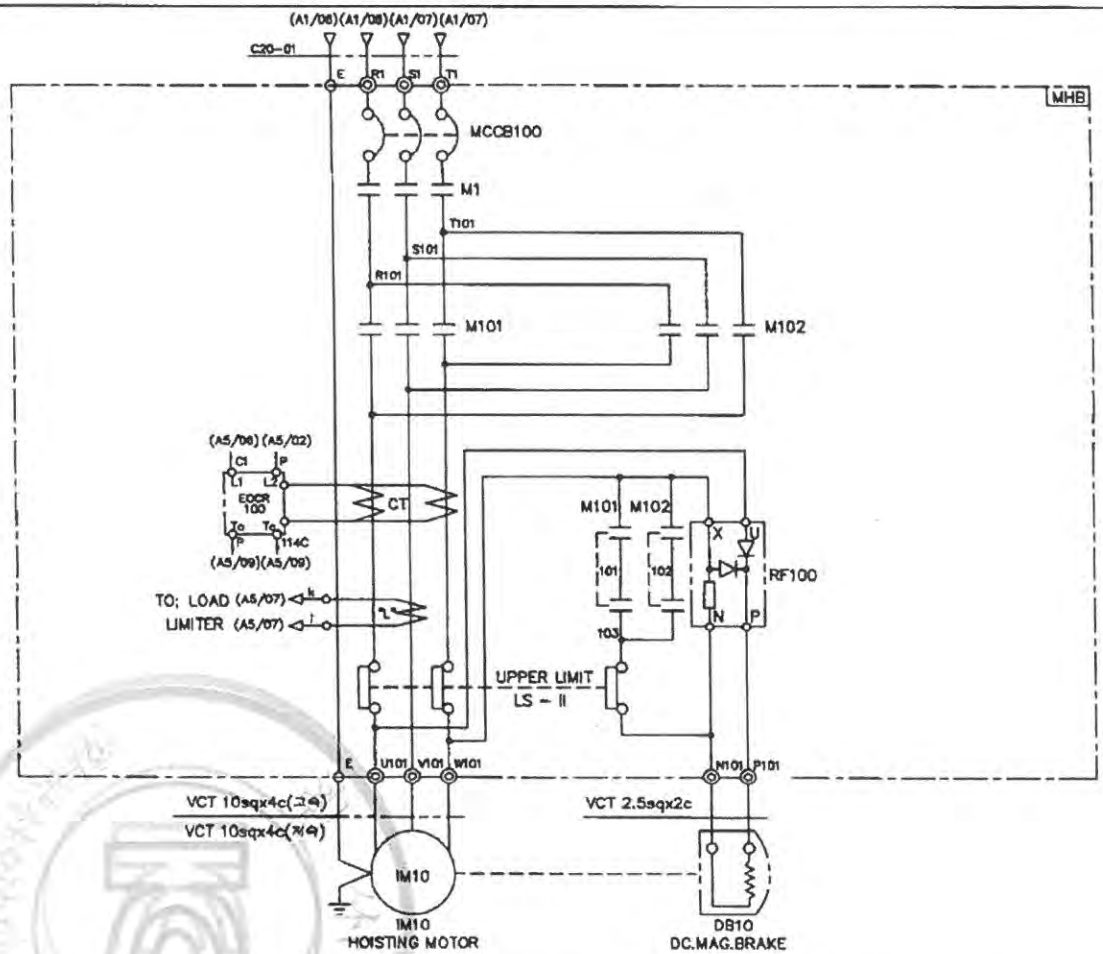


| SPECIFICATION / SYMBOLS / DESCRIPTION | HOISTING POWER | HOISTING MOTOR | DC.MAG BRAKE | NO FUSE BREAKER | TRANSFORMER | FUSE | | MAIN MAGNET | MAGNET CONTACTOR | UPPER LIMIT | ELECTRIC OVER CURRENT RELAY | SILICON RECTIFIER | LOAD LIMITER | CABLE |
|---|---|---|---|---|---|---|---|---|---|---|---|---|---|---|
| | HOIST | IM 10 | DB10 | MCCB100 | TR 1 | F11,F12 | F13 | M1 | M101,M102 | LS-I, LS-II | EOCR100 | RF100 | LOAD LIMITER | C20-01 |
| | 5TON AC 3PH 220V 60Hz | 8.5KW x 4P | DC 100V | ABS-53AF/50AT | 220/110,120V,100VA | 2A | 3A | DMC48C | DMC85C | AC 600V 75A | SS-30 | SR-60 | JDL-100 | VFCT 10sqx4c |
| | 5TON AC 3PH 220V 60Hz | 5.5KW x 6P | DC 100V | ABS-53AF/40AT | 220/110,120V,100VA | 2A | 3A | DMC48C | DMC65C | AC 600V 75A | SS-30 | SR-60 | JDL-100 | VFCT 10sqx4c |
| | 5TON AC 3PH 220V 60Hz | 4.2KW x 8P | DC 100V | ABS-53AF/40AT | 220/110,120V,100VA | 2A | 3A | DMC48C | DMC48C | AC 600V 75A | SS-30 | SR-60 | JDL-100 | VFCT 10sqx4c |
| SELECTION / MAKER | KUKDONG | | | LS | SHINHAN | - | | DONG-A | | KUKDONG | ASECO | | JUNGHO | DONGIL |

| MK | DATE | REVISIONS | CHK. | APP. |
|---|---|---|---|---|
| 4 | | | | |
| 3 | | | | |
| 2 | | | | |
| 1 | | | | |

| CUSTOMER | | DRAWING | DESIGN | CHECKED | APPROVED | SCALE | DATE | ORDER NO. |
|---|---|---|---|---|---|---|---|---|
| DRAWING TITLE | HOISTING POWER & CONTROL CIRCUIT DIAGRAM | | | | | NONE | | |
| | | 국동호이스트 주식회사 KUK DONG HOIST CO., LTD. | | | | DWG. NO | KD5E22S | |

불법복제 및 배포금지
불법복제 및 배포금지

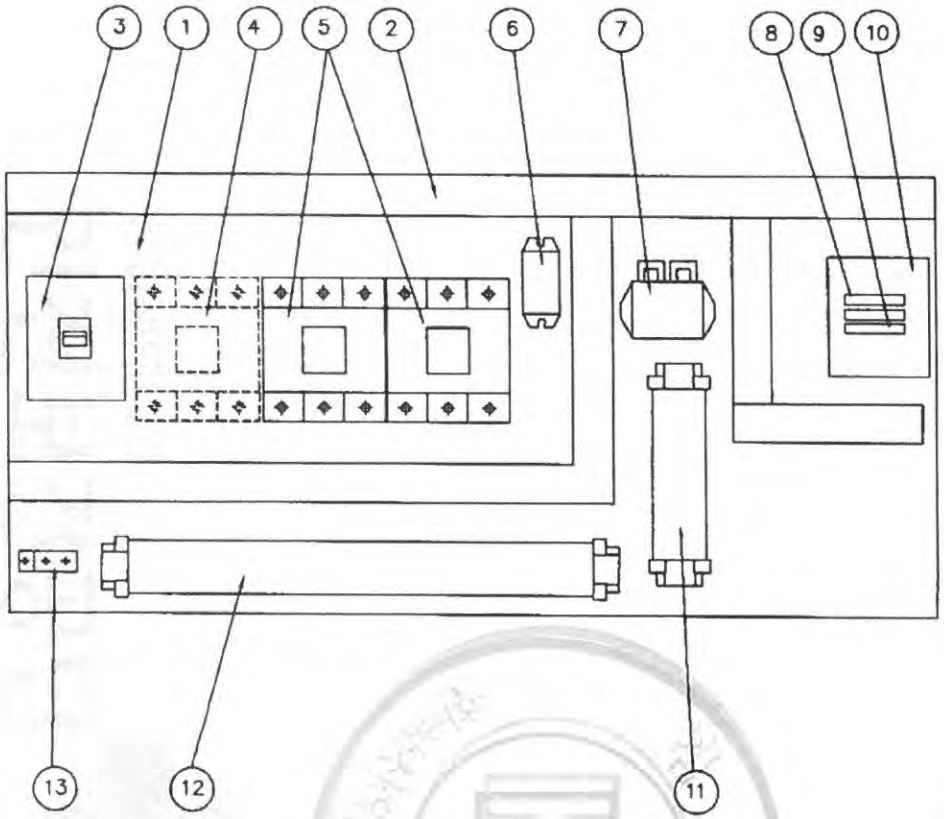


| NO | DESCRIPTION | SPECIFICATION | Q'TY | REMARK |
|---|---|---|---|---|
| 1 | CHASSIS PLATE | | 1 | 아 연 도 금 |
| 2 | CABLE DUCT | – | 1 | |
| 3 | N.F.B | 53AF/40AT | 1 | HOISTING |
| 4 | MAGNET CONTACTOR | DMC40C | 1 | MAIN MAG. |
| 5 | MAGNET CONTACTOR | DMC48C | 2 | HOISTING |
| 6 | SILICON RECTIFIER | SR-60 | 1 | HOISTING |
| 7 | E.O.C.R | SS-30 | 1 | HOISTING |
| 8 | FUSE | 1 A | 2 | |
| 9 | FUSE | 3 A | 1 | |
| 10 | TRANSFORMER | 380V/110V,120V, 100VA | 1 | |
| 11 | UPPER LIMIT | AC 600V/75A | 1 | |
| 12 | TERMINAL BLOCK | 60A,15A | | |
| 13 | EARTH TERMINAL | 3tx20x50 | 1 | |

NOTE

1. UPPER LIMIT LS-1,LS-2의 접점 허용 전류 용량. : AC 600V, 75A
2. POWER SOURCE : AC. 3ø 380V 60HZ
3. EARTH TERMINAL RESISTANCE : 0.018 Ω

NOTE

1. 전선의 색상은 다음과 같다.
   1) 흑색 : 교류및 직류전원선
   2) 적색 : 교류제어선
   3) 청색 : 직류제어선
   4) 녹색 또는 녹색과 노랑 혼용 : 접지선
2. CABLE MATERIAL : KIV OR EQUIVALENT
   MIN SIZE : 2.5sq
3. 제어용 전선 : 2.5mm KIV,HIV
4. 제작시 다소 변경 될수있음.
5. 외함 개방구조는 다음과 같을것.
   1) 외함 개방시 충전부분이 차단되도록 할것.
   2) 외함 개방후 충전되어있는 부분은 IP2X 이상의 직접 접촉 방호가 되어있을것.

| MK | DATE | REVISIONS | CHK. | APP. |
|---|---|---|---|---|
| | | | | |

| CUSTOMER | | DRAWING | DESIGN | CHECKED | APPROVED | SCALE | DATE | ORDER NO. |
|---|---|---|---|---|---|---|---|---|
| DRAWING TITLE | HOIST CONTROL BOX (조고속) | | | | | NONE | | |
| | ARRANGEMENT DRAWING | 극동호이스트 주식회사 KUK DONG HOIST CO., LTD. | | | | DWG. NO | KD5BA30S | |

불법복제 및 배포금지
무단복제 및 배포금지

| 1 | 2 | 3 | 4 | 5 | 6 | 7 | 8 | 9 | 10 | 11 | 12 | 13 | 14 | 15 | 16 | 17 | 18 | 19 | 20. |
|---|---|---|---|---|---|---|---|---|---|---|---|---|---|---|---|---|---|---|---|

ADR'S NO.

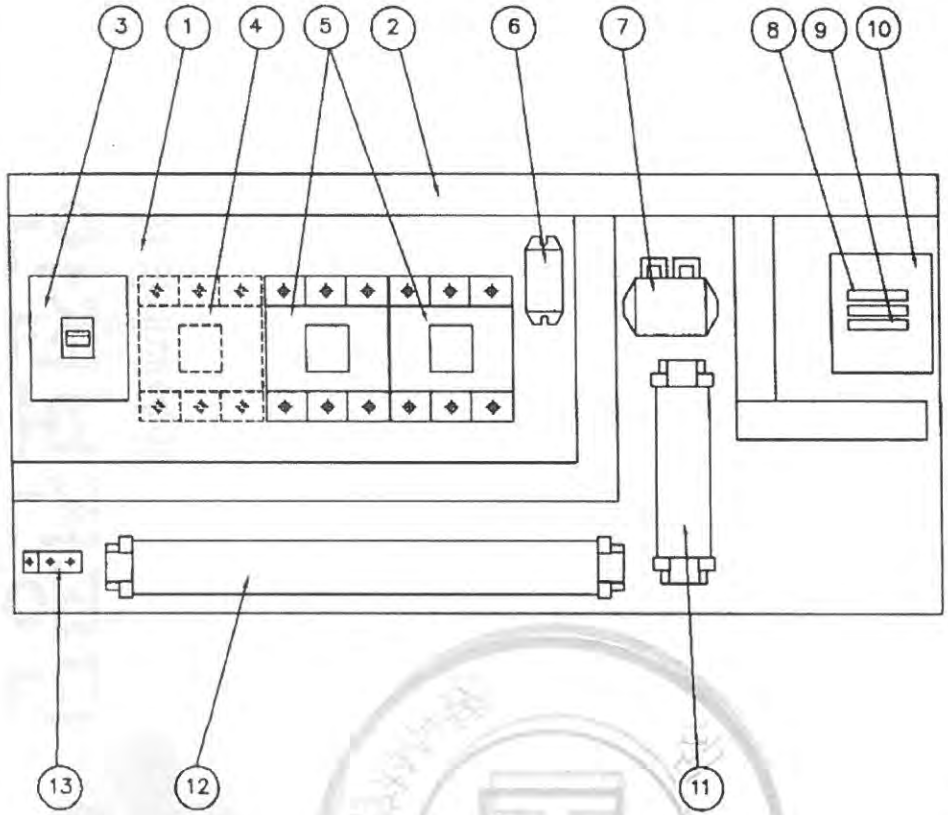


| NO | DESCRIPTION | SPECIFICATION | Q'TY | REMARK |
|---|---|---|---|---|
| 1 | CHASSIS PLATE | | 1 | 아 연 도 금 |
| 2 | CABLE DUCT | – | 1 | |
| 3 | N.F.B | 33AF/30AT | 1 | HOISTING |
| 4 | MAGNET CONTACTOR | DMC40C | 1 | MAIN MAG. |
| 5 | MAGNET CONTACTOR | DMC48C | 2 | HOISTING |
| 6 | SILICON RECTIFIER | SR-60 | 1 | HOISTING |
| 7 | E.O.C.R | SS-30 | 1 | HOISTING |
| 8 | FUSE | 1 A | 2 | |
| 9 | FUSE | 3 A | 1 | |
| 10 | TRANSFORMER | 380V/110V,120V, 100VA | 1 | |
| 11 | UPPER LIMIT | AC 600V/75A | 1 | |
| 12 | TERMINAL BLOCK | 60A,15A | | |
| 13 | EARTH TERMINAL | 3tx20x50 | 1 | |

NOTE

1. UPPER LIMIT LS-1,LS-2의 접점 허용 전류 용량. : AC 600V, 75A
2. POWER SOURCE : AC. 3ø 380V 60HZ
3. EARTH TERMINAL RESISTANCE : 0.018 Ω

NOTE

1. 전선의 색상은 다음과 같다.
   1) 흑색 : 고류및 직류전원선
   2) 적색 : 고류제어선
   3) 청색 : 직류제어선
   4) 녹색 또는 녹색과 노랑 혼용 : 접지선
2. CABLE MATERIAL : KIV OR EQUIVALENT / MIN SIZE : 2.5sq
3. 제어용 전선 : 2.5mm KIV,HIV
4. 제작시 다소 변경 될수있음.
5. 외함 개방구조는 다음과 같을것.
   1) 외함 개방시 충전부분이 차단되도록 할것.
   2) 외함 개방후 충전되어있는 부분은 IP2X 이상의 직접 접촉 방호가 되어있을것.

| MK | DATE | REVISIONS | CHK. | APP. |
|---|---|---|---|---|
| | | | | |
| | | | | |
| | | | | |
| | | | | |

| CUSTOMER | | DRAWING | DESIGN | CHECKED | APPROVED | SCALE | DATE | ORDER NO. |
|---|---|---|---|---|---|---|---|---|
| DRAWING TITLE | HOIST CONTROL BOX (고속) | | | | | NONE | | |
| | ARRANGEMENT DRAWING | 극동호이스트 주식회사 KUK DONG HOIST CO., LTD. | | | | DWG. NO | KD5BA31S | |


불법복제 및 배포금지

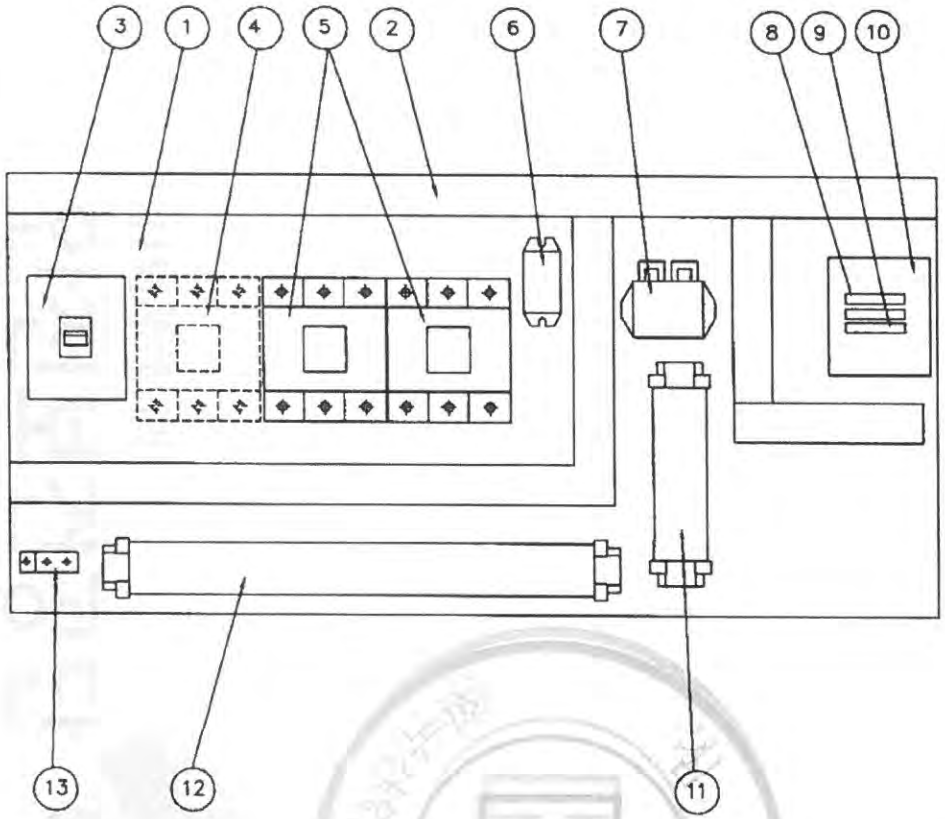


| NO | DESCRIPTION | SPECIFICATION | Q'TY | REMARK |
|---|---|---|---|---|
| 1 | CHASSIS PLATE | | 1 | 아연도금 |
| 2 | CABLE DUCT | – | 1 | |
| 3 | N.F.B | 33AF/20AT | 1 | HOISTING |
| 4 | MAGNET CONTACTOR | DMC40C | 1 | MAIN MAG. |
| 5 | MAGNET CONTACTOR | DMC48C | 2 | HOISTING |
| 6 | SILICON RECTIFIER | SR-60 | 1 | HOISTING |
| 7 | E.O.C.R | SS-30 | 1 | HOISTING |
| 8 | FUSE | 1 A | 2 | |
| 9 | FUSE | 3 A | 1 | |
| 10 | TRANSFORMER | 380V/110V,120V, 100VA | 1 | |
| 11 | UPPER LIMIT | AC 600V/75A | 1 | |
| 12 | TERMINAL BLOCK | 60A,15A | | |
| 13 | EARTH TERMINAL | 3tx20x50 | 1 | |

NOTE

1. UPPER LIMIT LS-1,LS-2의 접점 허용 전류. 용량. : AC 600V, 75A
2. POWER SOURCE : AC. 3ø 380V 60HZ
3. EARTH TERMINAL RESISTANCE : 0.018 Ω

NOTE

1. 전선의 색상은 다음과 같다.
   1) 흑색 : 고류및 직류전원선
   2) 적색 : 고류제어선
   3) 청색 : 직류제어선
   4) 녹색 또는 녹색과 노랑 혼용 : 접지선
2. CABLE MATERIAL : KIV OR EQUIVALENT / MIN SIZE : 2.5sq
3. 제어용 전선 : 2.5mm KIV,HIV
4. 제작시 다소 변경 될수있음.
5. 외함 개방구조는 다음과 같을것.
   1) 외함 개방시 충전부분이 차단되도록 할것.
   2) 외함 개방후 충전되어있는 부분은 IP2X 이상의 직접 접촉 방호가 되어있을것.

| MK | DATE | REVISIONS | CHK. | APP. |
|---|---|---|---|---|
| | | | | |
| | | | | |
| | | | | |
| | | | | |

| CUSTOMER | | DRAWING | DESIGN | CHECKED | APPROVED | SCALE | DATE | ORDER NO. |
|---|---|---|---|---|---|---|---|---|
| DRAWING TITLE | HOIST CONTROL BOX (저속) | | | | | NONE | | |
| | ARRANGEMENT DRAWING | 극동호이스트 주식회사 KUK DONG HOIST CO., LTD. | | | | DWG. NO | KD5BA32S | |

본 문서는 제품 배포용 입니다

| 1 | 2 | 3 | 4 | 5 | 6 | 7 | 8 | 9 | 10 | 11 | 12 | 13 | 14 | 15 | 16 | 17 | 18 | 19 | 20 |
|---|---|---|---|---|---|---|---|---|---|---|---|---|---|---|---|---|---|---|---|

POWER CIRCUIT

HOISTING MOTION

ADR'S NO. B1

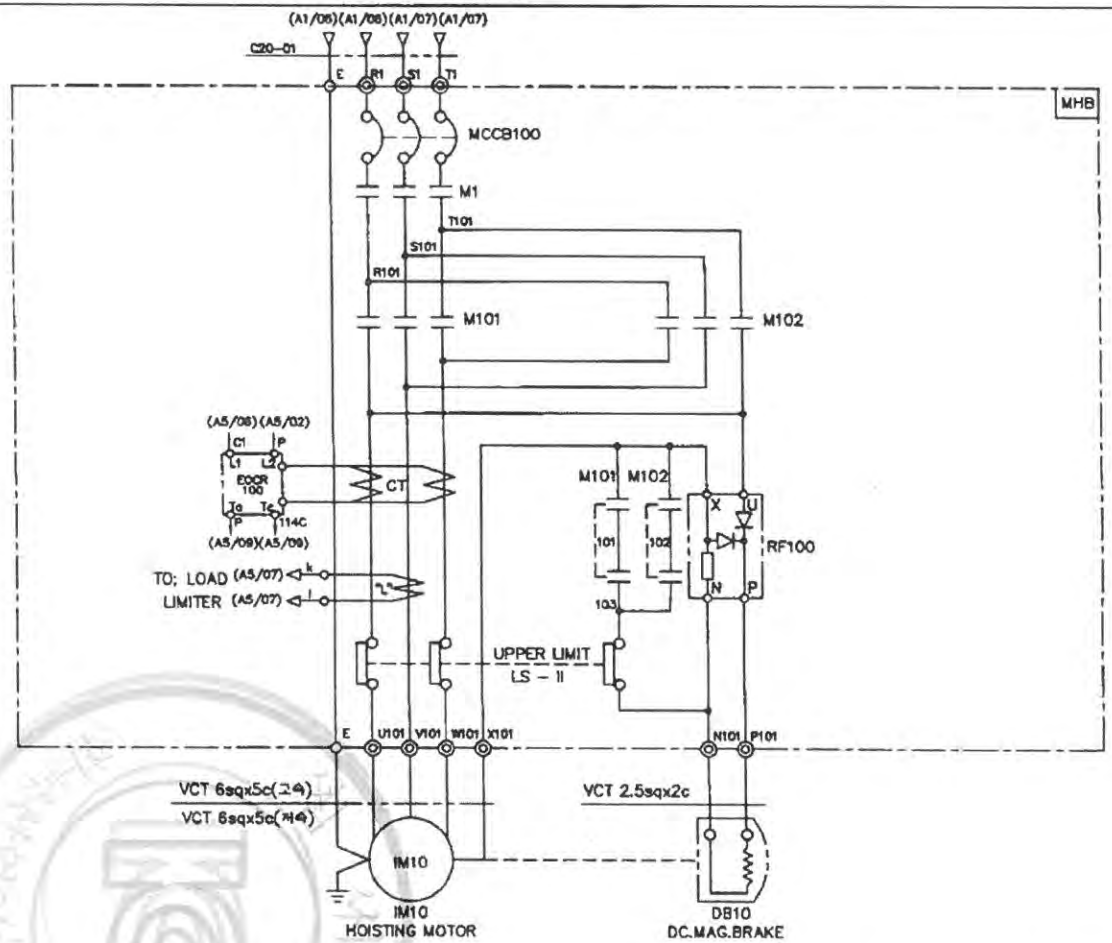


| SPECIFICATION / SYMBOLS / DESCRIPTION | HOISTING POWER | HOISTING MOTOR | DC.MAG' BRAKE | NO FUSE BREAKER | TRANSFORMER | FUSE | | MAIN MAGNET | MAGNET CONTACTOR | UPPER LIMIT | ELECTRIC OVER CURRENT RELAY | SILICON RECTIFIER | LOAD LIMITER | CABLE |
|---|---|---|---|---|---|---|---|---|---|---|---|---|---|---|
| | HOIST | IM 10 | DB10 | MCCB100 | TR 1 | F11,F12 | F13 | M1 | M101,M102 | LS-I, LS-II | EOCR100 | RF100 | LOAD LIMITER | C20-01 |
| | 5TON AC 3PH 380V 60Hz | 8.5KW x 4P | DC 100V | ABS-53AF/40AT | 380/110,120V,100VA | 1A | 3A | DMC40C | DMC48C | AC 600V 75A | SS-30 | SR-60 | JDL-100 | VFCT 6.0sqx4c |
| | 5TON AC 3PH 380V 60Hz | 5.5KW x 6P | DC 100V | ABE-33AF/30AT | 380/110,120V,100VA | 1A | 3A | DMC40C | DMC48C | AC 600V 75A | SS-30 | SR-60 | JDL-100 | VFCT 6.0sqx4c |
| | 5TON AC 3PH 380V 60Hz | 4.2KW x 8P | DC 100V | ABE-33AF/20AT | 380/110,120V,100VA | 1A | 3A | DMC48C | DMC48C | AC 600V 75A | SS-30 | SR-60 | JDL-100 | VFCT 6.0sqx4c |
| SELECTION / MAKER | KUKDONG | | | LS | SHINHAN | - | | DONG-A | | KUKDONG | ASECO | | JUNGHO | DONGIL |

| MK | DATE | REVISIONS | CHK. | APP. |
|---|---|---|---|---|
| ⚠ | | | | |
| ⚠ | | | | |
| ⚠ | | | | |
| ⚠ | | | | |

| CUSTOMER | | DRAWING | DESIGN | CHECKED | APPROVED | SCALE | DATE | ORDER NO. |
|---|---|---|---|---|---|---|---|---|
| DRAWING TITLE | HOISTING & T/S POWER CONTROL CIRCUIT DIAGRAM | | | | | NONE | | |
| | | KD 국동호이스트 주식회사 KUK DONG HOIST CO., LTD. | | | | DWG. NO | KD5E32S | |

불법복제 및 배포금지
불법복제 및 배포금지

불법복제 및 배포금지
불법복제 및 배포금지

| 1 | 2 | 3 | 4 | 5 | 6 | 7 | 8 | 9 | 10 | 11 | 12 | 13 | 14 | 15 | 16 | 17 | 18 | 19 | 20. |
|---|---|---|---|---|---|---|---|---|---|---|---|---|---|---|---|---|---|---|---|

ADR'S NO.

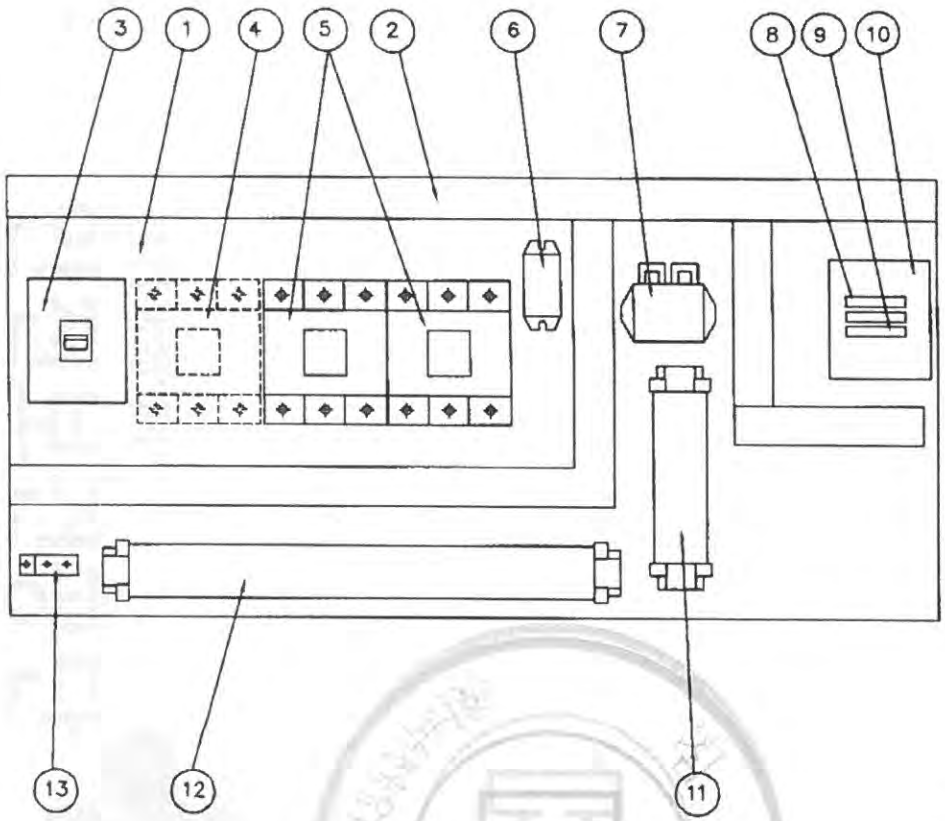


| NO | DESCRIPTION | SPECIFICATION | Q'TY | REMARK |
|---|---|---|---|---|
| 1 | CHASSIS PLATE | | 1 | 아 연 도 금 |
| 2 | CABLE DUCT | - | 1 | |
| 3 | N.F.B | 33AF/30AT | 1 | HOISTING |
| 4 | MAGNET CONTACTOR | DMC32C | 1 | MAIN MAG. |
| 5 | MAGNET CONTACTOR | DMC48C | 2 | HOISTING |
| 6 | SILICON RECTIFIER | SR-60 | 1 | HOISTING |
| 7 | E.O.C.R | SS-30 | 1 | HOISTING |
| 8 | FUSE | 1 A | 2 | |
| 9 | FUSE | 3 A | 1 | |
| 10 | TRANSFORMER | 440V/110V,120V, 100VA | 1 | |
| 11 | UPPER LIMIT | AC 600V/75A | 1 | |
| 12 | TERMINAL BLOCK | 60A,15A | | |
| 13 | EARTH TERMINAL | 3tx20x50 | 1 | |

N O T E

1. UPPER LIMIT LS-1,LS-2의 접점 허용 전류 용량. : AC 600V, 75A
2. POWER SOURCE : AC. 3ø 440V 60HZ
3. EARTH TERMINAL RESISTANCE : 0.018 Ω

NOTE

1. 전선의 색상은 다음과 같다.
   1) 흑색 : 고류및 직류전원선
   2) 적색 : 고류제어선
   3) 청색 : 직류제어선
   4) 녹색 또는 녹색과 노랑 혼용 : 접지선
2. CABLE MATERIAL : KIV OR EQUIVALENT
   MIN SIZE : 2.5sq
3. 제어용 전선 : 2.5mm KIV,HIV
4. 제작시 다소 변경 될수있음.
5. 외함 개방구조는 다음과 같을것.
   1) 외함 개방시 충전부분이 차단되도록 할것.
   2) 외함 개방후 충전되어있는 부분은 IP2X 이상의 직접 접촉 방호가 되어있을것.

| MK | DATE | REVISIONS | CHK. | APP. |
|---|---|---|---|---|
| ⚠ | | | | |
| ⚠ | | | | |
| ⚠ | | | | |
| ⚠ | | | | |

| CUSTOMER | | DRAWING | DESIGN | CHECKED | APPROVED | SCALE | DATE | ORDER NO. |
|---|---|---|---|---|---|---|---|---|
| DRAWING TITLE | HOIST CONTROL BOX (호고속) | | | | | NONE | | |
| | ARRANGEMENT DRAWING | KD 극동호이스트 주식회사 KUK DONG HOIST CO., LTD. | | | | DWG. NO | KD5BA40S | |

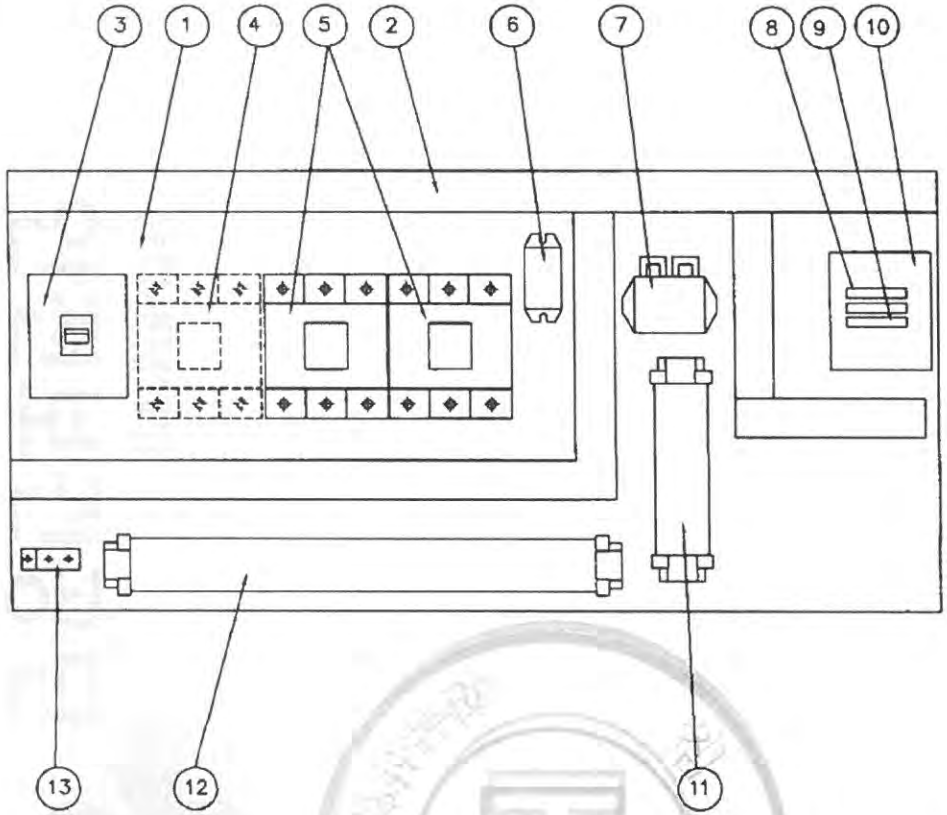


| NO | DESCRIPTION | SPECIFICATION | Q'TY | REMARK |
|---|---|---|---|---|
| 1 | CHASSIS PLATE | | 1 | 아 연 도 금 |
| 2 | CABLE DUCT | – | 1 | |
| 3 | N.F.B | 33AF/30AT | 1 | HOISTING |
| 4 | MAGNET CONTACTOR | DMC32C | 1 | MAIN MAG. |
| 5 | MAGNET CONTACTOR | DMC48C | 2 | HOISTING |
| 6 | SILICON RECTIFIER | SR-60 | 1 | HOISTING |
| 7 | E.O.C.R | SS-30 | 1 | HOISTING |
| 8 | FUSE | 1 A | 2 | |
| 9 | FUSE | 3 A | 1 | |
| 10 | TRANSFORMER | 440V/110V,120V, 100VA | 1 | |
| 11 | UPPER LIMIT | AC 600V/75A | 1 | |
| 12 | TERMINAL BLOCK | 60A,15A | | |
| 13 | EARTH TERMINAL | 3tx20x50 | 1 | |

N O T E

1. UPPER LIMIT LS-1,LS-2의 접점 허용 전류 용량. : AC 600V, 75A
2. POWER SOURCE : AC. 3ø 440V 60HZ
3. EARTH TERMINAL RESISTANCE : 0.018 Ω

NOTE

1. 전선의 색상은 다음과 같다.
   1) 흑색 : 고류및 직류전원선
   2) 적색 : 고류제어선
   3) 청색 : 직류제어선
   4) 녹색 또는 녹색과 노랑 혼용 : 접지선
2. CABLE MATERIAL : KIV OR EQUIVALENT
   MIN SIZE : 2.5sq
3. 제어용 전선 : 2.5mm KIV,HIV
4. 제작시 다소 변경 될수있음.
5. 외함 개방구조는 다음과 같을것.
   1) 외함 개방시 충전부분이 차단되도록 할것.
   2) 외함 개방후 충전되어있는 부분은 IP2X 이상의 직접 접촉 방호가 되어있을것.

| MK | DATE | REVISIONS | CHK. | APP. |
|---|---|---|---|---|
| ⚠ | | | | |
| ⚠ | | | | |
| ⚠ | | | | |
| ⚠ | | | | |

| CUSTOMER | |
|---|---|
| DRAWING TITLE | HOIST CONTROL BOX (고속) |
| | ARRANGEMENT DRAWING |

| DRAWING | DESIGN | CHECKED | APPROVED | SCALE | DATE | ORDER NO. |
|---|---|---|---|---|---|---|
| | | | | NONE | | |

극동호이스트 주식회사
KUK DONG HOIST CO., LTD.

DWG. NO KD5BA41S

불법복제 및 배포금지
사용포배 및 배포금지

불법복제 및 배포금지
불법복제 및 배포금지

| 1 | 2 | 3 | 4 | 5 | 6 | 7 | 8 | 9 | 10 | 11 | 12 | 13 | 14 | 15 | 16 | 17 | 18 | 19 | 20. |
|---|---|---|---|---|---|---|---|---|---|---|---|---|---|---|---|---|---|---|---|

ADR'S NO.

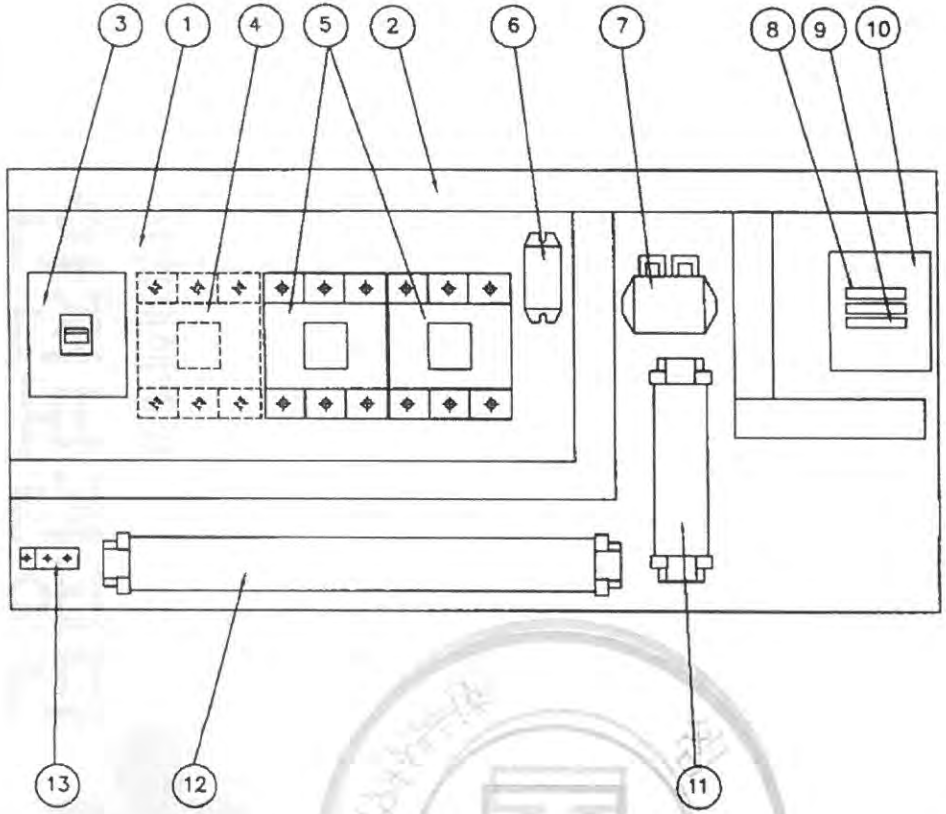


| NO | DESCRIPTION | SPECIFICATION | Q'TY | REMARK |
|---|---|---|---|---|
| 1 | CHASSIS PLATE | | 1 | 아 연 도 금 |
| 2 | CABLE DUCT | – | 1 | |
| 3 | N.F.B | 33AF/20AT | 1 | HOISTING |
| 4 | MAGNET CONTACTOR | DMC22C | 1 | MAIN MAG. |
| 5 | MAGNET CONTACTOR | DMC48C | 2 | HOISTING |
| 6 | SILICON RECTIFIER | SR-60 | 1 | HOISTING |
| 7 | E.O.C.R | SS-30 | 1 | HOISTING |
| 8 | FUSE | 1 A | 2 | |
| 9 | FUSE | 3 A | 1 | |
| 10 | TRANSFORMER | 440V/110V,120V, 100VA | 1 | |
| 11 | UPPER LIMIT | AC 600V/75A | 1 | |
| 12 | TERMINAL BLOCK | 60A,15A | | |
| 13 | EARTH TERMINAL | 3tx20x50 | 1 | |

NOTE

1. UPPER LIMIT LS-1,LS-2의 접점 허용 전류. 용량. : AC 600V, 75A
2. POWER SOURCE : AC. 3ø 440V 60HZ
3. EARTH TERMINAL RESISTANCE : 0.018 Ω

NOTE

1. 전선의 색상은 다음과 같다.
   1) 흑색 : 고류및 직류전원선
   2) 적색 : 고류제어선
   3) 청색 : 직류제어선
   4) 녹색 또는 녹여과 노랑 혼용 : 접지선
2. CABLE MATERIAL : KIV OR EQUIVALENT
   MIN SIZE : 2.5sq
3. 제어용 전선 : 2.5mm KIV,HIV
4. 제작시 다소 변경 될수있음.
5. 외함 개방구조는 다음과 같을것.
   1) 외함 개방시 충전부분이 차단되도록 할것.
   2) 외함 개방후 충전되어있는 부분은 IP2X 이상의 직접 접촉 방호가 되어있을것.

| MK | DATE | REVISIONS | CHK. | APP. |
|---|---|---|---|---|
| | | | | |
| | | | | |
| | | | | |
| | | | | |

| CUSTOMER | | DRAWING | DESIGN | CHECKED | APPROVED | SCALE | DATE | ORDER NO. |
|---|---|---|---|---|---|---|---|---|
| DRAWING TITLE | HOIST CONTROL BOX (저속) | | | | | NONE | | |
| | ARRANGEMENT DRAWING | KD 극동호이스트 주식회사 KUK DONG HOIST CO., LTD. | | | | DWG. NO | KD5BA42S | |

| 1 | 2 | 3 | 4 | 5 | 6 | 7 | 8 | 9 | 10 | 11 | 12 | 13 | 14 | 15 | 16 | 17 | 19 | 20 |
|---|---|---|---|---|---|---|---|---|---|---|---|---|---|---|---|---|---|---|

POWER CIRCUIT

HOISTING MOTION

ADR'S NO. B1

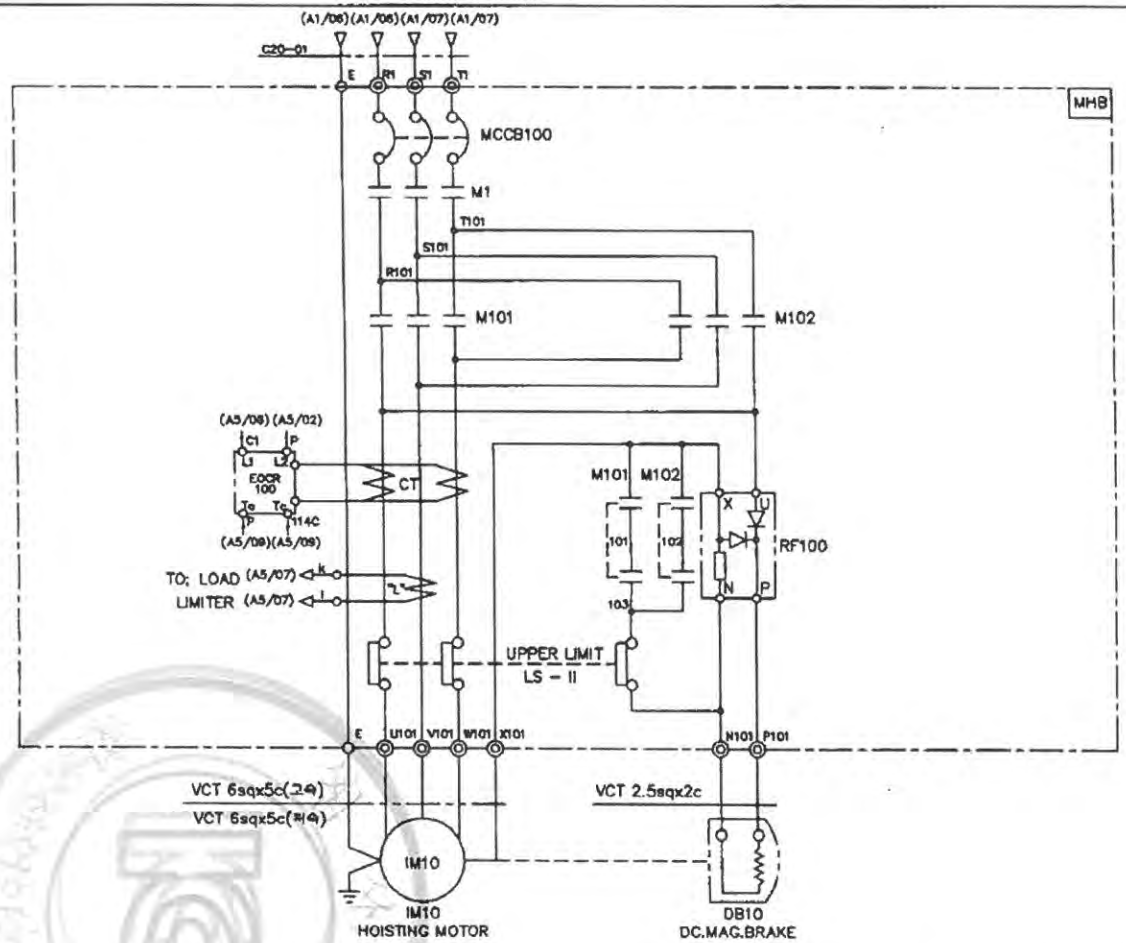


| SPECIFICATION / SYMBOLS / DESCRIPTION | HOISTING POWER | HOISTING MOTOR | DC.MAG BRAKE | NO FUSE BREAKER | TRANSFORMER | FUSE | | MAIN MAGNET | MAGNET CONTACTOR | UPPER LIMIT | ELECTRIC OVER CURRENT RELAY | SILICON RECTIFIER | LOAD LIMITER | CABLE |
|---|---|---|---|---|---|---|---|---|---|---|---|---|---|---|
| | HOIST | IM 10 | DB10 | MCCB100 | TR 1 | F11,F12 | F13 | M1 | M101,M102 | LS-I, LS-II | EOCR100 | RF100 | LOAD LIMITER | C20-01 |
| | 5TON AC 3PH 440V 60Hz | 8.5KW x 4P | DC 100V | ABE-33AF/30AT | 440/110,120V,100VA | 1A | 3A | DMC32C | DMC48C | AC 600V 75A | SS-30 | SR-60 | JDL-100 | VFCT 6.0sqx4c |
| | 5TON AC 3PH 440V 60Hz | 5.5KW x 6P | DC 100V | ABE-33AF/30AT | 440/110,120V,100VA | 1A | 3A | DMC32C | DMC48C | AC 600V 75A | SS-30 | SR-60 | JDL-100 | VFCT 6.0sqx4c |
| | 5TON AC 3PH 440V 60Hz | 4.2KW x 8P | DC 100V | ABE-33AF/20AT | 440/110,120V,100VA | 1A | 3A | DMC22C | DMC48C | AC 600V 75A | SS-30 | SR-60 | JDL-100 | VFCT 6.0sqx4c |
| SELECTION / MAKER | KUKDONG | | | LS | SHINHAN | - | | DONG-A | | KUKDONG | ASECO | | JUNGHO | DONGIL |

| MK | DATE | REVISIONS | CHK. | APP. |
|---|---|---|---|---|
| ⚠ | | | | |
| ⚠ | | | | |
| ⚠ | | | | |
| ⚠ | | | | |

| CUSTOMER | | DRAWING | DESIGN | CHECKED | APPROVED | SCALE | DATE | ORDER NO. |
|---|---|---|---|---|---|---|---|---|
| DRAWING TITLE | HOISTING & T/S POWER CONTROL CIRCUIT DIAGRAM | | | | | NONE | | |
| | | 극동호이스트 주식회사 KUK DONG HOIST CO., LTD. | | | | DWG. NO | KD5E42S | |

불법복제 및 배포금지
불법복제 및 배포금지

| 1 | 2 | 3 | 4 | 5 | 6 | 7 | 8 | 9 | 10 | 11 | 12 | 13 | 14 | 15 | 16 | 17 | 18 | 19 | 20. |
|---|---|---|---|---|---|---|---|---|---|---|---|---|---|---|---|---|---|---|---|

ADR'S NO.

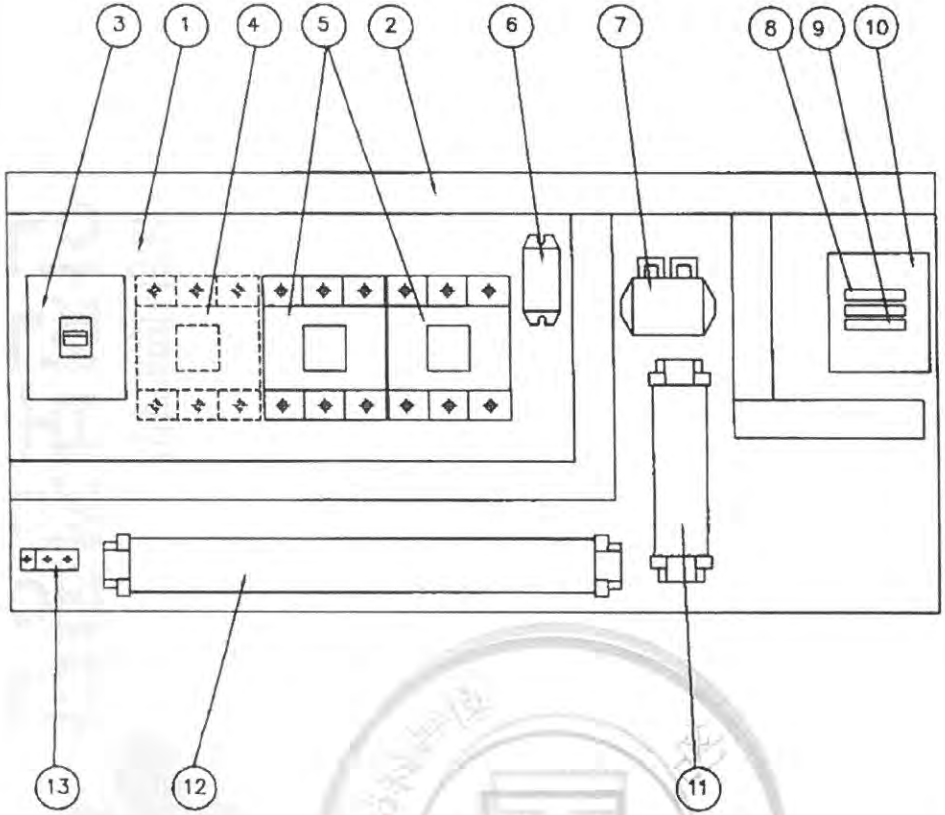


| NO | DESCRIPTION | SPECIFICATION | Q'TY | REMARK |
|---|---|---|---|---|
| 1 | CHASSIS PLATE | | 1 | 아 연 도 금 |
| 2 | CABLE DUCT | – | 1 | |
| 3 | N.F.B | 33AF/30AT | 1 | HOISTING |
| 4 | MAGNET CONTACTOR | DMC32C | 1 | MAIN MAG. |
| 5 | MAGNET CONTACTOR | DMC48C | 2 | HOISTING |
| 6 | SILICON RECTIFIER | SR-60 | 1 | HOISTING |
| 7 | E.O.C.R | SS-30 | 1 | HOISTING |
| 8 | FUSE | 1 A | 2 | |
| 9 | FUSE | 3 A | 1 | |
| 10 | TRANSFORMER | 460V/110V,120V, 100VA | 1 | |
| 11 | UPPER LIMIT | AC 600V/75A | 1 | |
| 12 | TERMINAL BLOCK | 60A,15A | | |
| 13 | EARTH TERMINAL | 3tx20x50 | 1 | |

N O T E

1. UPPER LIMIT LS-1,LS-2의 접점 허용 전류. 용량. : AC 600V, 75A
2. POWER SOURCE : AC. 3ø 460V 60HZ
3. EARTH TERMINAL RESISTANCE : 0.018 Ω

NOTE 1. 전선의 색상은 다음과 같다.

1) 흑색 : 고류및 직류전원선
2) 적색 : 고류제어선
3) 청색 : 직류제어선
4) 녹색 또는 녹색과 노랑 혼용 : 접지선

2. CABLE MATERIAL : KIV OR EQUIVALENT
   MIN SIZE : 2.5sq
3. 제어용 전선 : 2.5mm KIV,HIV
4. 제작시 다소 변경 될수있음.
5. 외함 개방구조는 다음과 같을것.
   1) 외함 개방시 충전부분이 차단되도록 할것.
   2) 외함 개방후 충전되어있는 부분은 IP2X 이상의 직접 접촉 방호가 되어있을것.

| MK | DATE | REVISIONS | CHK. | APP. |
|---|---|---|---|---|
| ⚠ | | | | |
| ⚠ | | | | |
| ⚠ | | | | |
| ⚠ | | | | |

| CUSTOMER | | DRAWING | DESIGN | CHECKED | APPROVED | SCALE | DATE | ORDER NO. |
|---|---|---|---|---|---|---|---|---|
| DRAWING TITLE | HOIST CONTROL BOX (조고속) | | | | | NONE | | |
| | ARRANGEMENT DRAWING | 국동호이스트 주식회사 KUK DONG HOIST CO., LTD. | | | | DWG. NO | KD5BA50S | |

불법복제 및 배포금지
사용목적 외 배포금지

무단복제 및 배포금지
사용목적 외 배포금지

ADR'S NO.

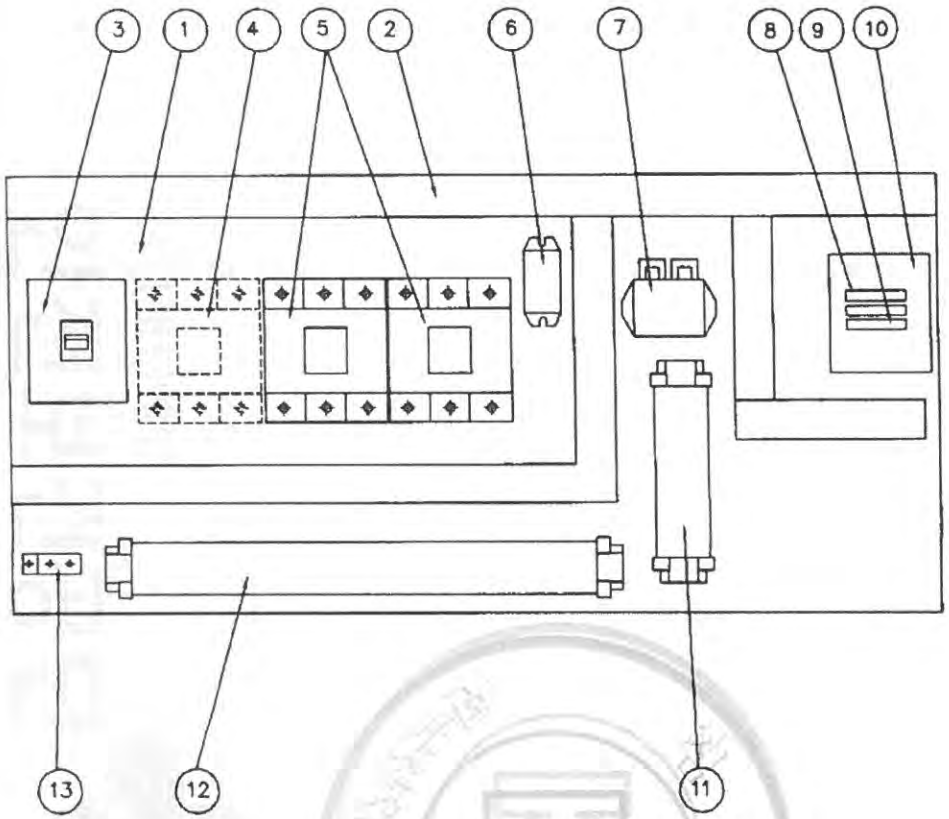


| NO | DESCRIPTION | SPECIFICATION | Q'TY | REMARK |
|---|---|---|---|---|
| 1 | CHASSIS PLATE | | 1 | 아 연 도 금 |
| 2 | CABLE DUCT | – | 1 | |
| 3 | N.F.B | 33AF/30AT | 1 | HOISTING |
| 4 | MAGNET CONTACTOR | DMC32C | 1 | MAIN MAG. |
| 5 | MAGNET CONTACTOR | DMC48C | 2 | HOISTING |
| 6 | SILICON RECTIFIER | SR-60 | 1 | HOISTING |
| 7 | E.O.C.R | SS-30 | 1 | HOISTING |
| 8 | FUSE | 1 A | 2 | |
| 9 | FUSE | 3 A | 1 | |
| 10 | TRANSFORMER | 460V/110V,120V, 100VA | 1 | |
| 11 | UPPER LIMIT | AC 600V/75A | 1 | |
| 12 | TERMINAL BLOCK | 60A,15A | | |
| 13 | EARTH TERMINAL | 3tx20x50 | 1 | |

NOTE

1. UPPER LIMIT LS-1,LS-2의 접점 허용 전류 용량. : AC 600V, 75A
2. POWER SOURCE : AC. 3ϕ 460V 60HZ
3. EARTH TERMINAL RESISTANCE : 0.018 Ω

NOTE

1. 전선의 색상은 다음과 같다.
   1) 흑색 : 교류및 직류전원선
   2) 적색 : 교류제어선
   3) 청색 : 직류제어선
   4) 녹색 또는 녹색과 노랑 혼용 : 접지선
2. CABLE MATERIAL : KIV OR EQUIVALENT
   MIN SIZE : 2.5sq
3. 제어용 전선 : 2.5mm KIV,HIV
4. 제작시 다소 변경 될수있음.
5. 외함 개방구조는 다음과 같을것.
   1) 외함 개방시 충전부분이 차단되도록 할것.
   2) 외함 개방후 충전되어있는 부분은 IP2X 이상의 직접 접촉 방호가 되어있을것.

| MK | DATE | REVISIONS | CHK. | APP. |
|---|---|---|---|---|
| | | | | |
| | | | | |
| | | | | |
| | | | | |

| CUSTOMER | | DRAWING | DESIGN | CHECKED | APPROVED | SCALE | DATE | ORDER NO. |
|---|---|---|---|---|---|---|---|---|
| DRAWING TITLE | HOIST CONTROL BOX (고속) | | | | | NONE | | |
| | ARRANGEMENT DRAWING | 극동호이스트 주식회사 KUK DONG HOIST CO., LTD. | | | | DWG. NO | KD5BA51S | |

| 1 | 2 | 3 | 4 | 5 | 6 | 7 | 8 | 9 | 10 | 11 | 12 | 13 | 14 | 15 | 16 | 17 | 18 | 19 | 20. |
|---|---|---|---|---|---|---|---|---|---|---|---|---|---|---|---|---|---|---|---|

ADR'S NO.

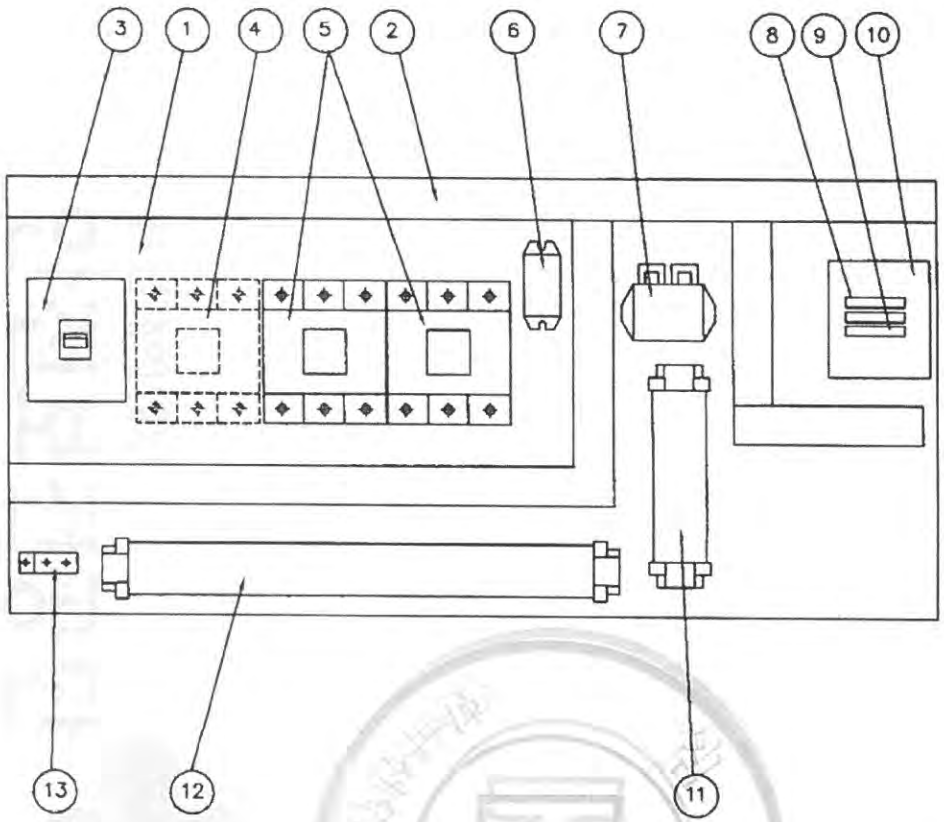


| NO | DESCRIPTION | SPECIFICATION | Q'TY | REMARK |
|---|---|---|---|---|
| 1 | CHASSIS PLATE | | 1 | 아 연 도 금 |
| 2 | CABLE DUCT | – | 1 | |
| 3 | N.F.B | 33AF/20AT | 1 | HOISTING |
| 4 | MAGNET CONTACTOR | DMC22C | 1 | MAIN MAG. |
| 5 | MAGNET CONTACTOR | DMC48C | 2 | HOISTING |
| 6 | SILICON RECTIFIER | SR-60 | 1 | HOISTING |
| 7 | E.O.C.R | SS-30 | 1 | HOISTING |
| 8 | FUSE | 1 A | 2 | |
| 9 | FUSE | 3 A | 1 | |
| 10 | TRANSFORMER | 460V/110V,120V, 100VA | 1 | |
| 11 | UPPER LIMIT | AC 600V/75A | 1 | |
| 12 | TERMINAL BLOCK | 60A,15A | | |
| 13 | EARTH TERMINAL | 3tx20x50 | 1 | |

N O T E

1. UPPER LIMIT LS-1,LS-2의 접점 허용 전류. 용량. : AC 600V, 75A
2. POWER SOURCE : AC. 3Φ 460V 60HZ
3. EARTH TERMINAL RESISTANCE : 0.018 Ω

NOTE
1. 전선의 색상은 다음과 같다.
   1) 흑색 : 고류및 직류전원선
   2) 적색 : 고류제어선
   3) 청색 : 직류제어선
   4) 녹색 또는 녹색과 노랑 혼용 : 접지선
2. CABLE MATERIAL : KIV OR EQUIVALENT
   MIN SIZE : 2.5sq
3. 제어용 전선 : 2.5mm KIV,HIV
4. 제작시 다소 변경 될수있음.
5. 외함 개방구조는 다음과 같을것.
   1) 외함 개방시 충전부분이 차단되도록 할것.
   2) 외함 개방후 충전되어있는 부분은 IP2X 이상의 직접 접촉 방호가 되어있을것.

| MK | DATE | REVISIONS | CHK. | APP. |
|---|---|---|---|---|
| △ | | | | |
| △ | | | | |
| △ | | | | |
| △ | | | | |

| CUSTOMER | | DRAWING | DESIGN | CHECKED | APPROVED | SCALE | DATE | ORDER NO. |
|---|---|---|---|---|---|---|---|---|
| DRAWING TITLE | HOIST CONTROL BOX (저속) | | | | | NONE | | |
| | ARRANGEMENT DRAWING | KD 극동호이스트 주식회사 KUK DONG HOIST CO., LTD. | | | | DWG. NO | KD5BA52S | |

불법복제 및 배포금지
사용목적 및 배포제한

| 1 | 2 | 3 | 4 | 5 | 6 | 7 | 8 | 9 | 10 | 11 | 12 | 13 | 14 | 15 | 16 | 17 | 19 | 20 |
|---|---|---|---|---|---|---|---|---|---|---|---|---|---|---|---|---|---|---|
| POWER CIRCUIT | | | | | | | | | | | | | | | | | | ADR'S NO. |
| HOISTING MOTION | | | | | | | | | | | | | | | | | | B1 |

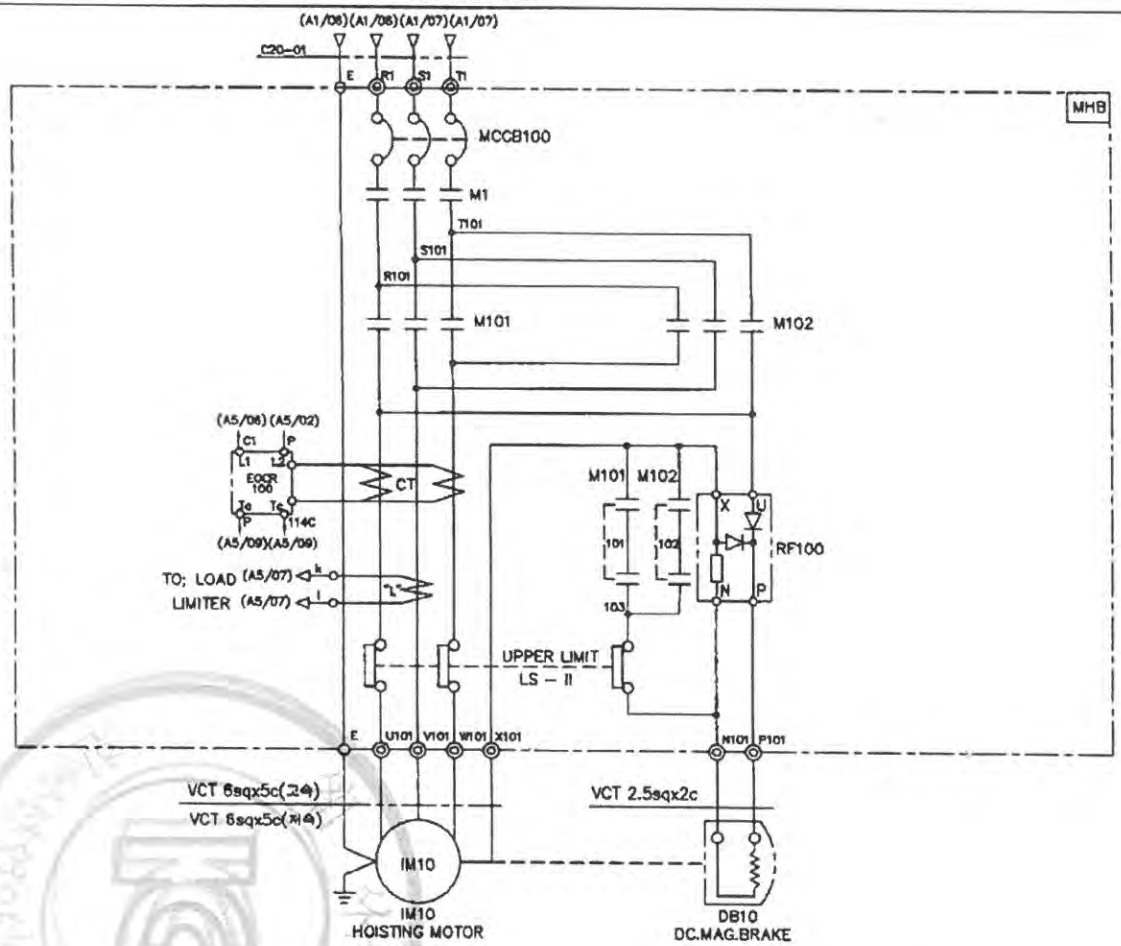


| SPECIFICATION / SYMBOLS / DESCRIPTION | HOISTING POWER | HOISTING MOTOR | DC.MAG' BRAKE | NO FUSE BREAKER | TRANSFORMER | FUSE | | MAIN MAGNET | MAGNET CONTACTOR | UPPER LIMIT | ELECTRIC OVER CURRENT RELAY | SILICON RECTIFIER | LOAD LIMITER | CABLE |
|---|---|---|---|---|---|---|---|---|---|---|---|---|---|---|
| | HOIST | IM 10 | DB10 | MCCB100 | TR 1 | F11,F12 | F13 | M1 | M101,M102 | LS-I, LS-II | EOCR100 | RF100 | LOAD LIMITER | C20-01 |
| | 5TON AC 3PH 460V 60Hz | 8.5KW x 4P | DC 100V | ABE-33AF/30AT | 460/110,120V,100VA | 1A | 3A | DMC32C | DMC48C | AC 600V 75A | SS-30 | SR-60 | JDL-100 | VFCT 6.0sqx4c |
| | 5TON AC 3PH 460V 60Hz | 5.5KW x 6P | DC 100V | ABE-33AF/30AT | 460/110,120V,100VA | 1A | 3A | DMC32C | DMC48C | AC 600V 75A | SS-30 | SR-60 | JDL-100 | VFCT 6.0sqx4c |
| | 5TON AC 3PH 460V 60Hz | 4.2KW x 8P | DC 100V | ABE-33AF/20AT | 460/110,120V,100VA | 1A | 3A | DMC22C | DMC48C | AC 600V 75A | SS-30 | SR-60 | JDL-100 | VFCT 6.0sqx4c |
| SELECTION / MAKER | | KUKDONG | | LS | SHINHAN | – | | DONG-A | | KUKDONG | ASECO | | JUNGHO | DONGIL |

| MK | DATE | REVISIONS | CHK. | APP. |
|---|---|---|---|---|
| 4 | | | | |
| 3 | | | | |
| 2 | | | | |
| 1 | | | | |

| CUSTOMER | | DRAWING | DESIGN | CHECKED | APPROVED | SCALE | DATE | ORDER NO. |
|---|---|---|---|---|---|---|---|---|
| DRAWING TITLE | HOISTING & T/S POWER CONTROL CIRCUIT DIAGRAM | | | | | NONE | | |
| | | 국동호이스트 주식회사 KUK DONG HOIST CO., LTD. | | | | DWG. NO | KD5E52S | |

불법복제 및 배포금지
불법복제 및 배포금지

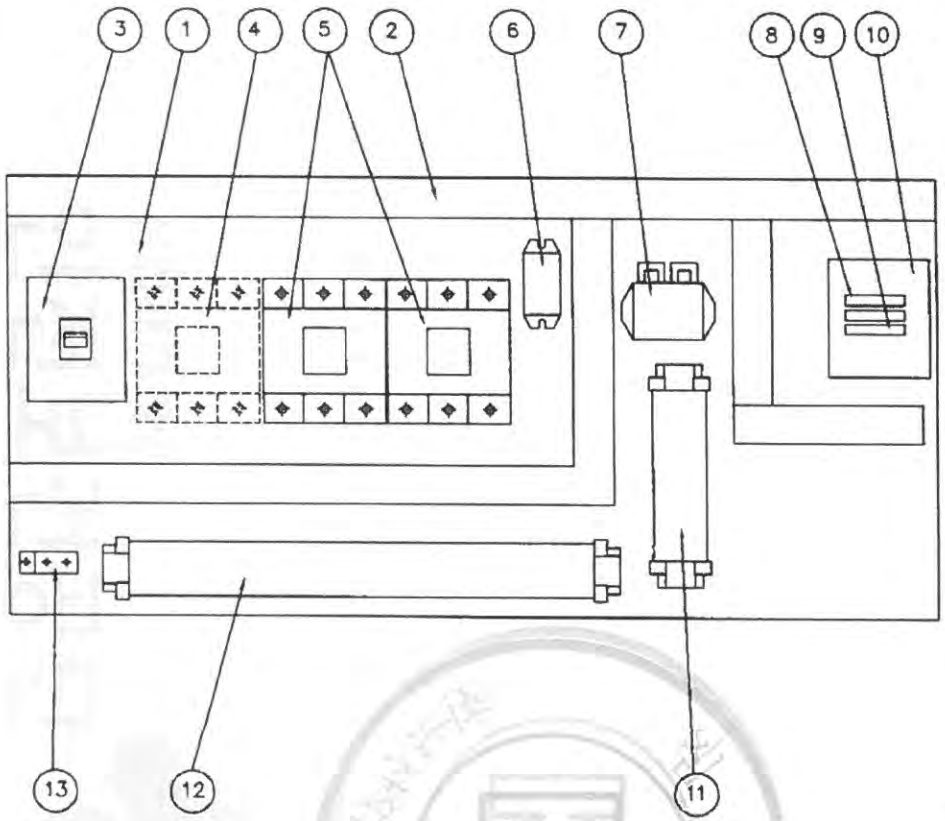


| NO | DESCRIPTION | SPECIFICATION | Q'TY | REMARK |
|---|---|---|---|---|
| 1 | CHASSIS PLATE | | 1 | 아 연 도 금 |
| 2 | CABLE DUCT | – | 1 | |
| 3 | N.F.B | 33AF/30AT | 1 | HOISTING |
| 4 | MAGNET CONTACTOR | DMC32C | 1 | MAIN MAG. |
| 5 | MAGNET CONTACTOR | DMC48C | 2 | HOISTING |
| 6 | SILICON RECTIFIER | SR–60 | 1 | HOISTING |
| 7 | E.O.C.R | SS–30 | 1 | HOISTING |
| 8 | FUSE | 1 A | 2 | |
| 9 | FUSE | 3 A | 1 | |
| 10 | TRANSFORMER | 480V/110V,120V, 100VA | 1 | |
| 11 | UPPER LIMIT | AC 600V/75A | 1 | |
| 12 | TERMINAL BLOCK | 60A,15A | | |
| 13 | EARTH TERMINAL | 3tx20x50 | 1 | |

N O T E

1. UPPER LIMIT LS–1,LS–2의 접점 허용 전류 용량. : AC 600V, 75A
2. POWER SOURCE : AC. 3ø 480V 60HZ
3. EARTH TERMINAL RESISTANCE : 0.018 Ω

NOTE
1. 전선의 색상은 다음과 같다.
   1) 흑색 : 고류및 직류전원선
   2) 적색 : 고류제어선
   3) 청색 : 직류제어선
   4) 녹색 또는 녹색과 노랑 혼용 : 접지선
2. CABLE MATERIAL : KIV OR EQUIVALENT / MIN SIZE : 2.5sq
3. 제어용 전선 : 2.5mm KIV,HIV
4. 제작시 다소 변경 될수있음.
5. 외함 개방구조는 다음과 같을것.
   1) 외함 개방시 충전부분이 차단되도록 할것.
   2) 외함 개방후 충전되어있는 부분은 IP2X 이상의 직접 접촉 방호가 되어있을것.

| MK | DATE | REVISIONS | CHK. | APP. |
|---|---|---|---|---|
| | | | | |
| | | | | |
| | | | | |
| | | | | |

| CUSTOMER | |
|---|---|
| DRAWING TITLE | HOIST CONTROL BOX (초고속) |
| | ARRANGEMENT DRAWING |

| DRAWING | DESIGN | CHECKED | APPROVED | SCALE | DATE | ORDER NO. |
|---|---|---|---|---|---|---|
| | | | | NONE | | |

극동호이스트 주식회사
KUK DONG HOIST CO., LTD.

DWG. NO KD5BA60S

불법복제 및 배포금지
무단복제 및 배포금지

| 1 | 2 | 3 | 4 | 5 | 6 | 7 | 8 | 9 | 10 | 11 | 12 | 13 | 14 | 15 | 16 | 17 | 18 | 19 | 20. |
|---|---|---|---|---|---|---|---|---|---|---|---|---|---|---|---|---|---|---|---|

ADR'S NO.

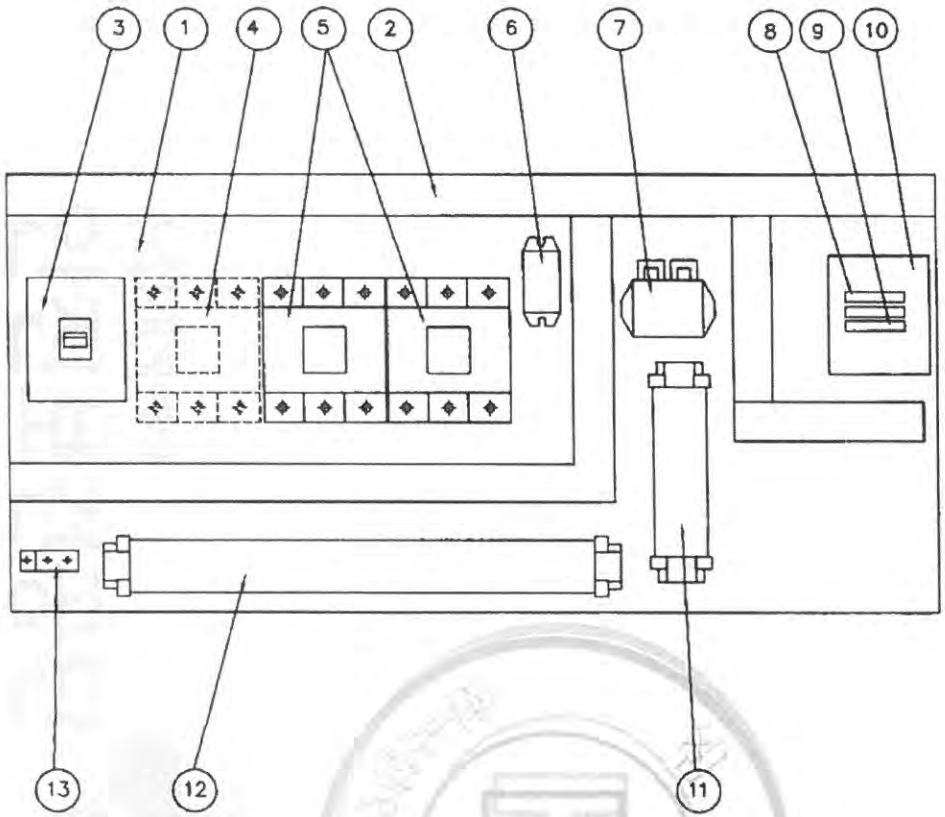


| NO | DESCRIPTION | SPECIFICATION | Q'TY | REMARK |
|---|---|---|---|---|
| 1 | CHASSIS PLATE | | 1 | 아 연 도 금 |
| 2 | CABLE DUCT | – | 1 | |
| 3 | N.F.B | 33AF/30AT | 1 | HOISTING |
| 4 | MAGNET CONTACTOR | DMC32C | 1 | MAIN MAG. |
| 5 | MAGNET CONTACTOR | DMC48C | 2 | HOISTING |
| 6 | SILICON RECTIFIER | SR-60 | 1 | HOISTING |
| 7 | E.O.C.R | SS-30 | 1 | HOISTING |
| 8 | FUSE | 1 A | 2 | |
| 9 | FUSE | 3 A | 1 | |
| 10 | TRANSFORMER | 480V/110V,120V, 100VA | 1 | |
| 11 | UPPER LIMIT | AC 600V/75A | 1 | |
| 12 | TERMINAL BLOCK | 60A,15A | | |
| 13 | EARTH TERMINAL | 3tx20x50 | 1 | |

N O T E

1. UPPER LIMIT LS-1,LS-2의 접점 허용 전류 용량. : AC 600V, 75A
2. POWER SOURCE : AC. 3ø 480V 60HZ
3. EARTH TERMINAL RESISTANCE : 0.018 Ω

NOTE 1. 전선의 색상은 다음과 같다.
1) 흑색 : 고류및 직류전원선
2) 적색 : 고류제어선
3) 청색 : 직류제어선
4) 녹색 또는 녹색과 노랑 혼용 : 접지선
2. CABLE MATERIAL : KIV OR EQUIVALENT, MIN SIZE : 2.5sq
3. 제어용 전선 : 2.5mm KIV,HIV
4. 제작시 다소 변경 될수있음.
5. 외함 개방구조는 다음과 같을것.
1) 외함 개방시 충전부분이 차단되도록 할것.
2) 외함 개방후 충전되어있는 부분은 IP2X 이상의 직접 접촉 방호가 되어있을것.

| MK | DATE | REVISIONS | CHK. | APP. |
|---|---|---|---|---|
| | | | | |

| CUSTOMER | | DRAWING | DESIGN | CHECKED | APPROVED | SCALE | DATE | ORDER NO. |
|---|---|---|---|---|---|---|---|---|
| DRAWING TITLE | HOIST CONTROL BOX (고속) | | | | | NONE | | |
| | ARRANGEMENT DRAWING | 극동호이스트 주식회사 KUK DONG HOIST CO., LTD. | | | | DWG. NO | KD5BA61S | |

불법복제 및 배포금지
불법복제 및 배포금지

| 1 | 2 | 3 | 4 | 5 | 6 | 7 | 8 | 9 | 10 | 11 | 12 | 13 | 14 | 15 | 16 | 17 | 18 | 19 | 20. |
|---|---|---|---|---|---|---|---|---|---|---|---|---|---|---|---|---|---|---|---|

ADR'S NO.

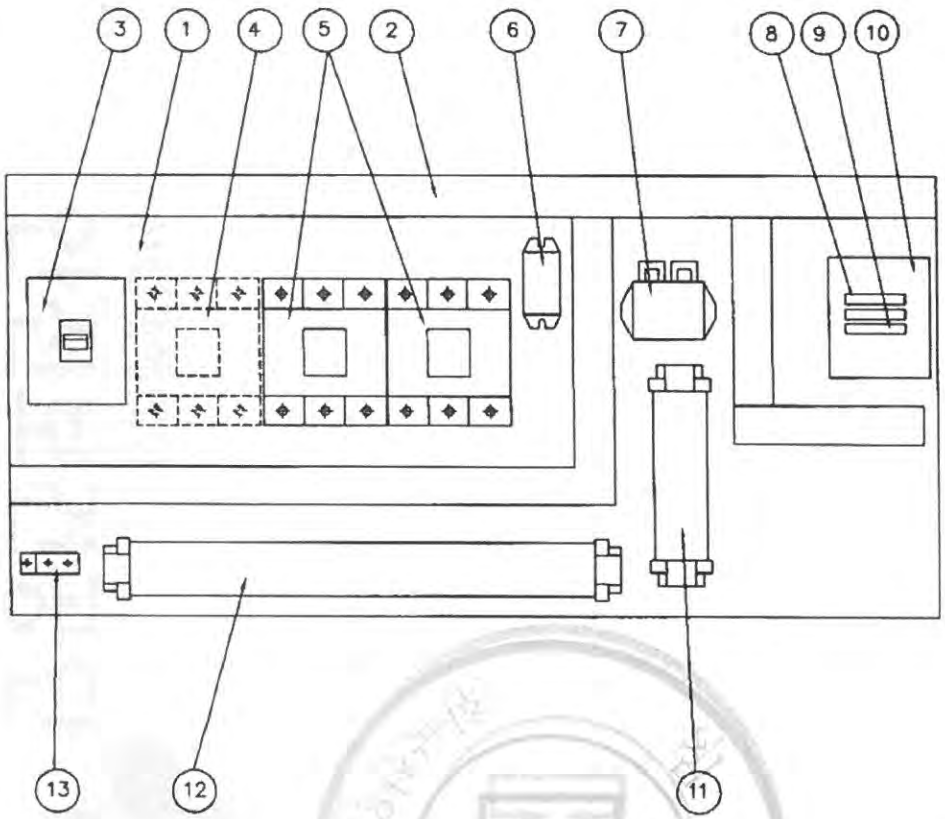


| NO | DESCRIPTION | SPECIFICATION | Q'TY | REMARK |
|---|---|---|---|---|
| 1 | CHASSIS PLATE | | 1 | 아 연 도 금 |
| 2 | CABLE DUCT | – | 1 | |
| 3 | N.F.B | 33AF/20AT | 1 | HOISTING |
| 4 | MAGNET CONTACTOR | DMC22C | 1 | MAIN MAG. |
| 5 | MAGNET CONTACTOR | DMC48C | 2 | HOISTING |
| 6 | SILICON RECTIFIER | SR-60 | 1 | HOISTING |
| 7 | E.O.C.R | SS-30 | 1 | HOISTING |
| 8 | FUSE | 1 A | 2 | |
| 9 | FUSE | 3 A | 1 | |
| 10 | TRANSFORMER | 480V/110V,120V, 100VA | 1 | |
| 11 | UPPER LIMIT | AC 600V/75A | 1 | |
| 12 | TERMINAL BLOCK | 60A,15A | | |
| 13 | EARTH TERMINAL | 3tx20x50 | 1 | |

N O T E

1. UPPER LIMIT LS-1,LS-2의 접점 허용 전류 용량. : AC 600V, 75A
2. POWER SOURCE : AC. 3ø 480V 60HZ
3. EARTH TERMINAL RESISTANCE : 0.018 Ω

NOTE 1. 전선의 색상은 다음과 같다.
1) 흑색 : 고류및 직류전원선
2) 적색 : 고류제어선
3) 청색 : 직류제어선
4) 녹색 또는 녹색과 노랑 혼용 : 접지선
2. CABLE MATERIAL : KIV OR EQUIVALENT
MIN SIZE : 2.5sq
3. 제어용 전선 : 2.5mm KIV,HIV
4. 제작시 다소 변경 될수있음.
5. 외함 개방구조는 다음과 같을것.
1) 외함 개방시 충전부분이 차단되도록 할것.
2) 외함 개방후 충전되어있는 부분은 IP2X 이상의 직접 접촉 방호가 되어있을것.

| MK | DATE | REVISIONS | CHK. | APP. |
|---|---|---|---|---|
| ⚠ | | | | |
| ⚠ | | | | |
| ⚠ | | | | |
| ⚠ | | | | |

| CUSTOMER | | DRAWING | DESIGN | CHECKED | APPROVED | SCALE | DATE | ORDER NO. |
|---|---|---|---|---|---|---|---|---|
| DRAWING TITLE | HOIST CONTROL BOX (저속) | | | | | NONE | | |
| | ARRANGEMENT DRAWING | KD 극동호이스트 주식회사 KUK DONG HOIST CO., LTD. | | | | DWG. NO | KD5BA62S | |

불법복제 및 배포금지
상업용도 배포 및 사용금지

| 1 | 2 | 3 | 4 | 5 | 6 | 7 | 8 | 9 | 10 | 11 | 12 | 13 | 14 | 15 | 16 | 17 | 19 | 20 |
|---|---|---|---|---|---|---|---|---|---|---|---|---|---|---|---|---|---|---|
| POWER CIRCUIT | | | | | | | | | | | | | | | | | | ADR'S NO. |
| HOISTING MOTION | | | | | | | | | | | | | | | | | | B1 |

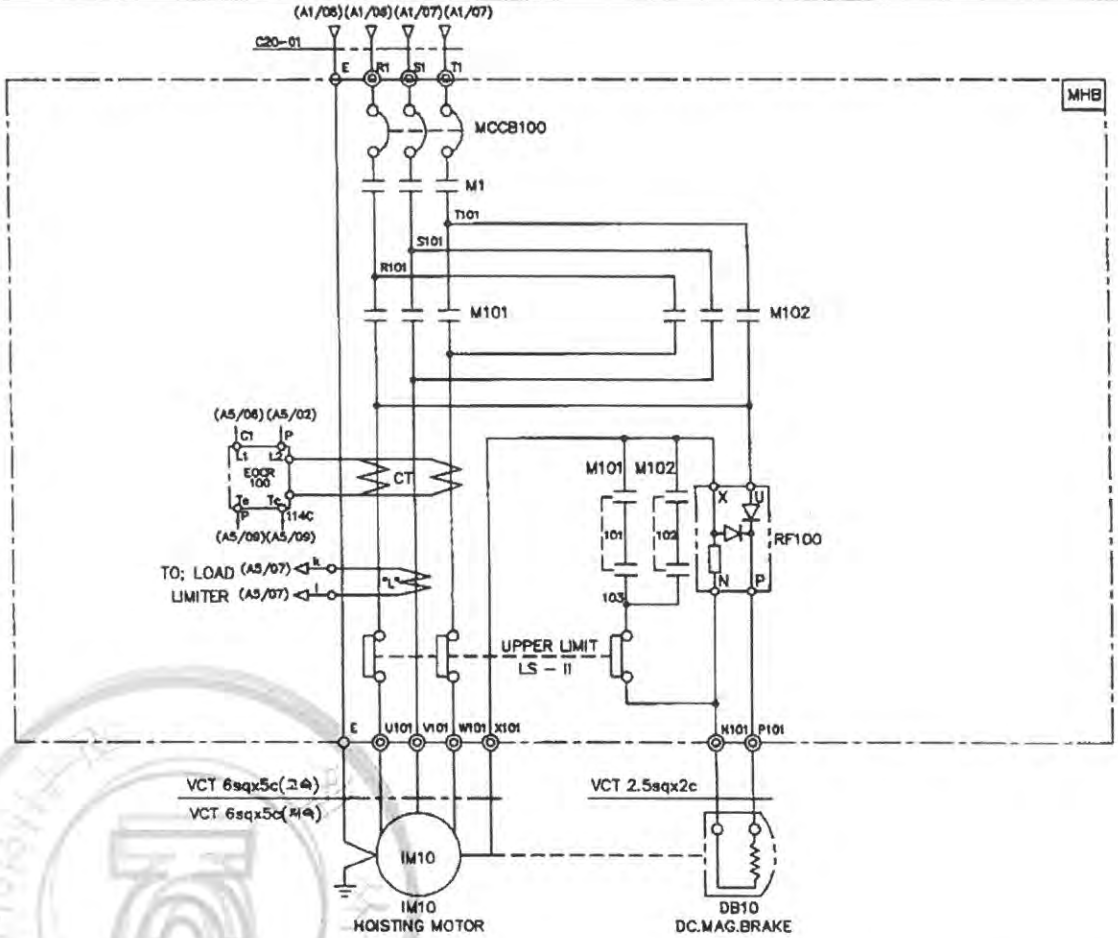


| SPECIFICATION / SYMBOLS / DESCRIPTION | HOISTING POWER | HOISTING MOTOR | DC.MAG BRAKE | NO FUSE BREAKER | TRANSFORMER | FUSE | | MAIN MAGNET | MAGNET CONTACTOR | UPPER LIMIT | ELECTRIC OVER CURRENT RELAY | SILICON RECTIFIER | LOAD LIMITER | CABLE |
|---|---|---|---|---|---|---|---|---|---|---|---|---|---|---|
| | HOIST | IM 10 | DB10 | MCCB100 | TR 1 | F11,F12 | F13 | M1 | M101,M102 | LS-I, LS-II | EOCR100 | RF100 | LOAD LIMITER | C20-01 |
| | 5TON AC 3PH 480V 60Hz | 8.5KW x 4P | DC 100V | ABE-33AF/30AT | 480/110,120V,100VA | 1A | 3A | DMC32C | DMC48C | AC 600V 75A | SS-30 | SR-60 | JDL-100 | VFCT 6.0sqx4c |
| | 5TON AC 3PH 480V 60Hz | 5.5KW x 6P | DC 100V | ABE-33AF/30AT | 480/110,120V,100VA | 1A | 3A | DMC32C | DMC48C | AC 600V 75A | SS-30 | SR-60 | JDL-100 | VFCT 6.0sqx4c |
| | 5TON AC 3PH 480V 60Hz | 4.2KW x 8P | DC 100V | ABE-33AF/20AT | 480/110,120V,100VA | 1A | 3A | DMC22C | DMC48C | AC 600V 75A | SS-30 | SR-60 | JDL-100 | VFCT 6.0sqx4c |
| SELECTION / MAKER | KUKDONG | | | LS | SHINHAN | - | | DONG-A | | KUKDONG | ASECO | | JUNGHO | DONGIL |

| MK | DATE | REVISIONS | CHK. | APP. |
|---|---|---|---|---|
| 4 | | | | |
| 3 | | | | |
| 2 | | | | |
| 1 | | | | |

| CUSTOMER | | DRAWING | DESIGN | CHECKED | APPROVED | SCALE | DATE | ORDER NO. |
|---|---|---|---|---|---|---|---|---|
| DRAWING TITLE | HOISTING & T/S POWER CONTROL CIRCUIT | | | | | NONE | | |
| | DIAGRAM | KD 국동호이스트 주식회사 KUK DONG HOIST CO., LTD. | | | | DWG. NO | KD5E62S | |

불법복제 및 배포금지
불법복제 및 배포금지

| 1 | 2 | 3 | 4 | 5 | 6 | 7 | 8 | 9 | 10 | 11 | 12 | 13 | 14 | 15 | 16 | 17 | 18 | 19 | 20. |
|---|---|---|---|---|---|---|---|---|---|---|---|---|---|---|---|---|---|---|---|
| CONTROL CIRCUIT | | | | | | | | | | | | | | | | | | | ADR'S NO. |
| EM. STOP | | | | | | | | OVER LOAD BUZZER | | | UP | | DOWN | | | | | | A5 |

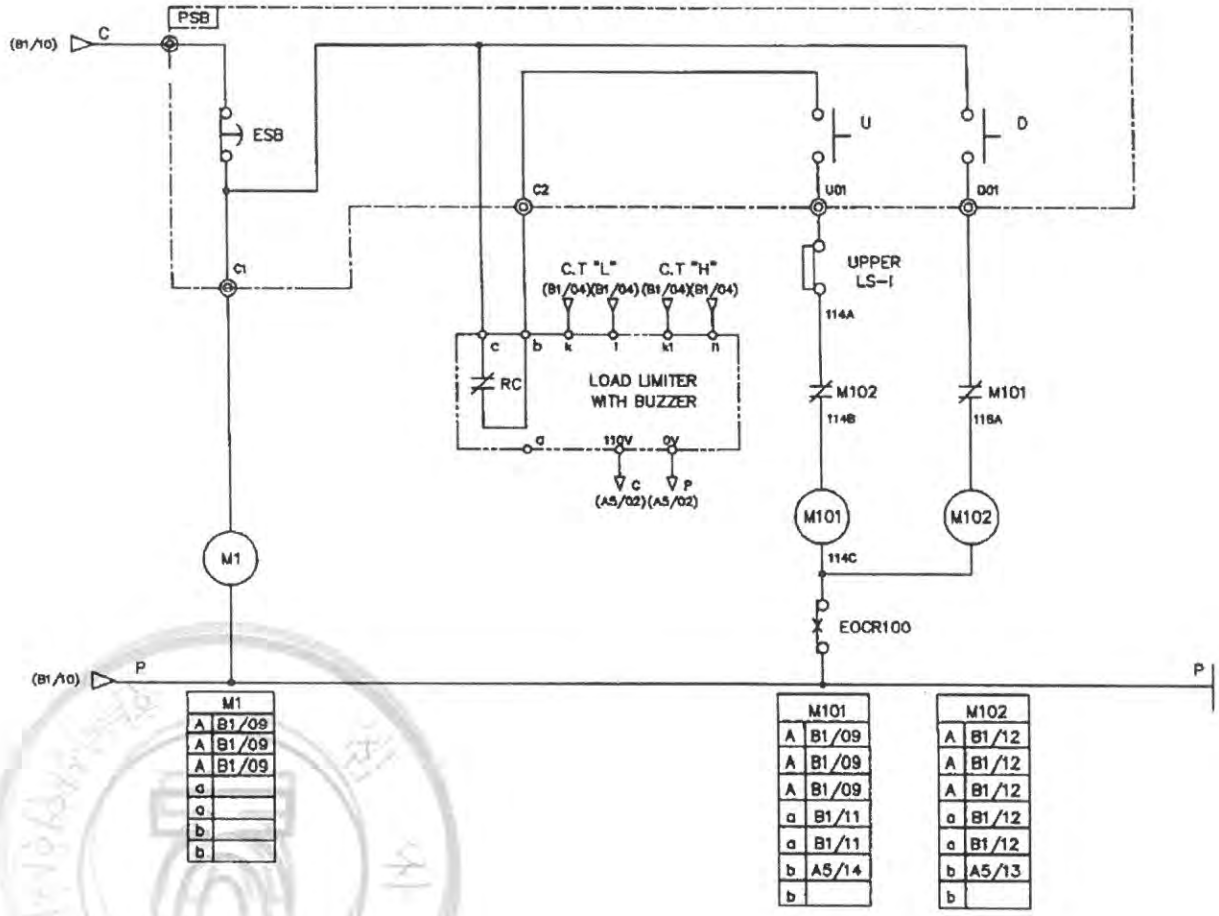


| M1 | |
|---|---|
| A | B1/09 |
| A | B1/09 |
| A | B1/09 |
| a | |
| a | |
| b | |
| b | |

| M101 | |
|---|---|
| A | B1/09 |
| A | B1/09 |
| A | B1/09 |
| a | B1/11 |
| a | B1/11 |
| b | A5/14 |
| b | |

| M102 | |
|---|---|
| A | B1/12 |
| A | B1/12 |
| A | B1/12 |
| a | B1/12 |
| a | B1/12 |
| b | A5/13 |
| b | |

| SPECIFICATION / SYMBOLS / DESCRIPTION | UPPER LIMIT | PENDANT P.B S/W | LOAD LIMITER | LIMIT SWITCH |
|---|---|---|---|---|
| | LS-1 | E.S.B | LOAD LIMITER | LS-301,302 |
| | AC 600V 3A | 250V 3A | JDL-100 | HY - W904 |
| | AC 600V 3A | 250V 3A | JDL-100 | HY - W904 |
| MAKER | KUNHUNG | KG-AUTO | JUNGHO | HANYOUNG |

| MK | DATE | REVISIONS | CHK. | APP. |
|---|---|---|---|---|
| 4 | | | | |
| 3 | | | | |
| 2 | | | | |
| 1 | | | | |

| CUSTOMER | | DRAWING | DESIGN | CHECKED | APPROVED | SCALE | DATE | ORDER NO. |
|---|---|---|---|---|---|---|---|---|
| DRAWING TITLE | MAIN POWER 2 & CONTROL CIRCUIT | | | | | NONE | | |
| | DIAGRAM | 극동호이스트 주식회사 KUK DONG HOIST CO., LTD. | | | | DWG. NO | KD5E002S | |

무단배포 및 재제 금지

■ PUSH BUTTON SWITCH (KG-H02EA)

KD

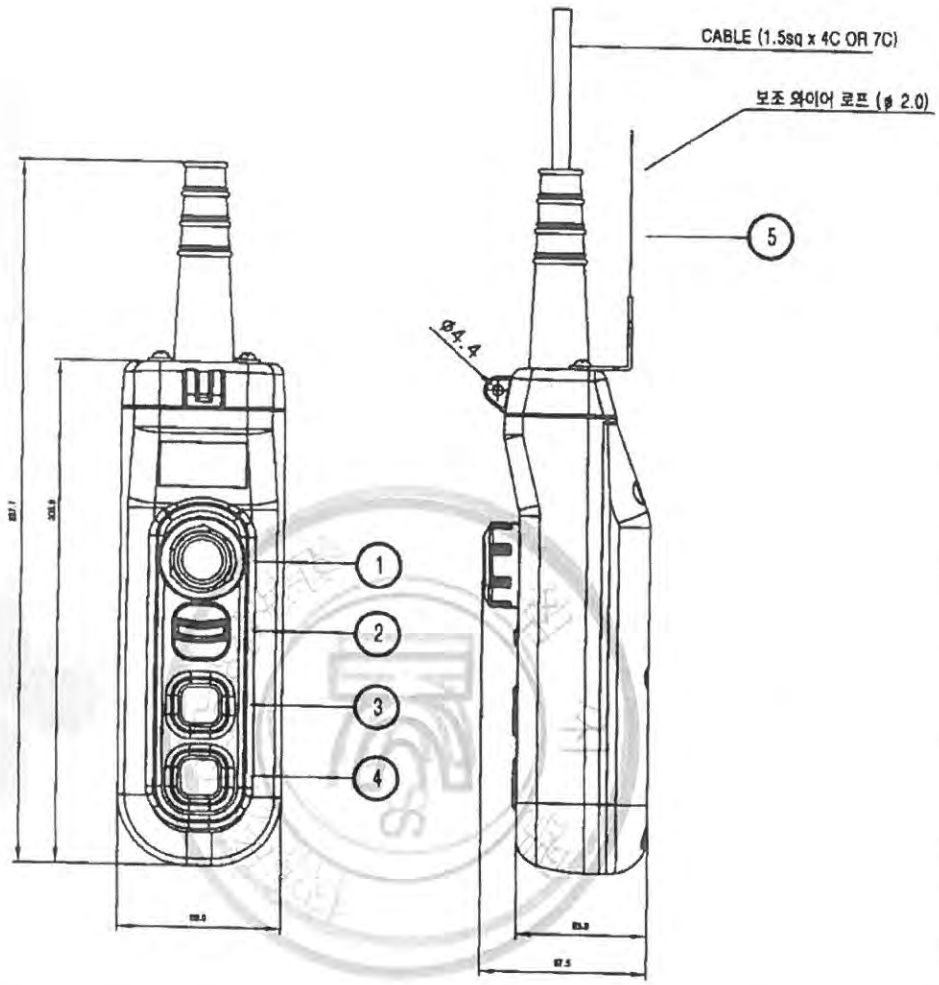


| NO | SYMBOL | TYPE | SPEC. | COLOR |
|---|---|---|---|---|
| 1 | E.B.S | PUSH LOCK TURN RESET TYPE | 250VAC x 6A | RED |
| 2 | SPARE | | | BLACK |
| 3 | UP | PUSH BUTTON | | |
| 4 | DOWN | PUSH BUTTON | | |
| 5 | 보조 WIRE | ø 2.0 | | |

* MATERIAL : POLYCARBOBATE(PLASTIC)
* BODY COLOR : YELLOW, BLACK
* IP : 55 이상

| 색상 \ 구분 | 조작버튼 | 표시등 |
|---|---|---|
| 적색 | 비상 | 비상 |
| 황색 | 비정상 | 비정상 |
| 녹색 | 정상 | 정상 |
| 청색 | 의무 | 의무 |
| 흰색,회색-흑색 | 지정된의미없음 | 기타 |

| NO | DESCRIPTION | MATERIAL | Q'TY | SIZE | UNIT WEIGHT(Kg) | TOTAL WEIGHT(Kg) | REMARK |
|---|---|---|---|---|---|---|---|

| | | | | | | |
|---|---|---|---|---|---|---|
| Scale | N/S | DWG. | CHK. | APP. | Title | PUSH BUTTON SWITCH |
| Pro-jection | 3ANGLES | K.M.Seo | | M.H.Kim | | & EMERGENCY BUTTON SWITCH |
| Mass | Kg | | | | | KG-H02EA |
| KD KUK DONG HOIST CO., LTD. | | | | | DWG No. | |

불법복제 및 배포금지
사용표시 및 배포 불법복제

불법복제 및 배포금지
불법복제 및 배포금지

# KDC5-L6(9, 12, 18, 24, 30, 36, 40)-S
# KDC5-L6(9, 12) - P

불법복제 및 배포금지
불법복제 및 배포금지

* MAIN POWER : AC 3PH 220V,380V,440V,460V,480 60Hz (LIFT 6, 9, 12, 18, 24, 30, 36, 40M)

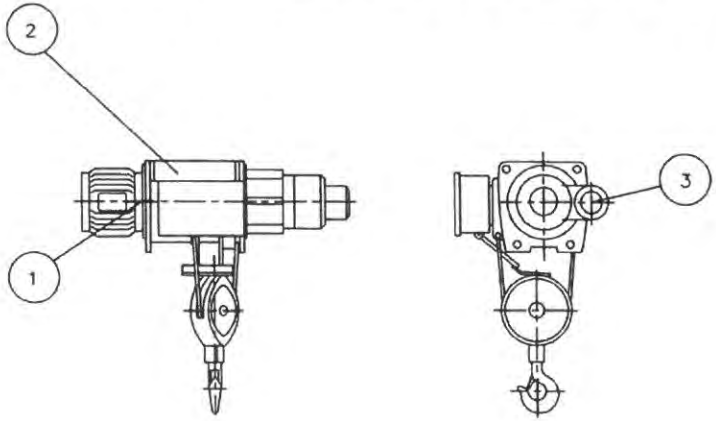


1

| KD ELECTRIC WIRE ROPE HOIST | | | |
|---|---|---|---|
| MODEL | | RATING | min |
| CAPACITY | Kg | LIFT | m |
| HOIST SPEED | m/min | POWER SOURCE | V Hz |
| HOIST MOTOR | Kw P | AMP.S R&T HOIST | A |
| TRAV.SPEED | m/min | AMP.S R&T TRAV. | A |
| TRAV.MOTOR | Kw P | WIRE ROPE | Ø |
| WIDTH OF RAIL | mm | WEIGET | Kg |
| DATE | | SERIAL | |
| KUKDONG HOIST CO.,LTD | | | |

2

| KD 3 PHASE INDUCTION MOTOR | | | |
|---|---|---|---|
| KW | P | TYPE | TENV |
| VOLTS | V | RATING | min |
| AMP.S | A | AMP.TEMP | 40℃ |
| HEARTS | | INS.CLASS | F |
| R.P.M | | BEARING | |
| ROTOR | C | BEARING | |
| SERIAL. | | DATE | |
| KUKDONG HOIST CO.,LTD | | | |

3

| KD 3 PHASE INDUCTION MOTOR | | | |
|---|---|---|---|
| KW | P | TYPE | TENV |
| VOLTS | V | RATING | min |
| AMP.S | A | AMP.TEMP | 40℃ |
| HEARTS | | INS.CLASS | F |
| R.P.M | | BEARING | |
| ROTOR | C | BEARING | |
| SERIAL. | | DATE | |
| KUKDONG HOIST CO.,LTD | | | |

| MK | DATE | REVISIONS | CHK. | APP. |
|---|---|---|---|---|
| 4 | | | | |
| 3 | | | | |
| 2 | | | | |
| 1 | | | | |

| CUSTOMER | | DRAWING | DESIGN | CHECKED | APPROVED | SCALE | DATE | ORDER NO. |
|---|---|---|---|---|---|---|---|---|
| DRAWING TITLE | WIRE HOIST NAME PLATE | | | | | NONE | | |
| | | KD 극동호이스트 주식회사 KUK DONG HOIST CO., LTD. | | | | DWG. NO | KD5E0601 | |

| NO | DESCRIPTION | CABLE SIZE |
|---|---|---|
| 1 | MAIN EARTH LINE | USER SCOPE |
| 2 | HOIST POWER SOURCE WITH EARTH | VCTF 10(6.0)SQ x 1C |
| 3 | HOISTING MOTOR WITH EARTH | VCT 10(6.0)SQ x 1C |
| 4 | CREEP MOTOR WITH EARTH | VCT 4.0SQ x 1C |

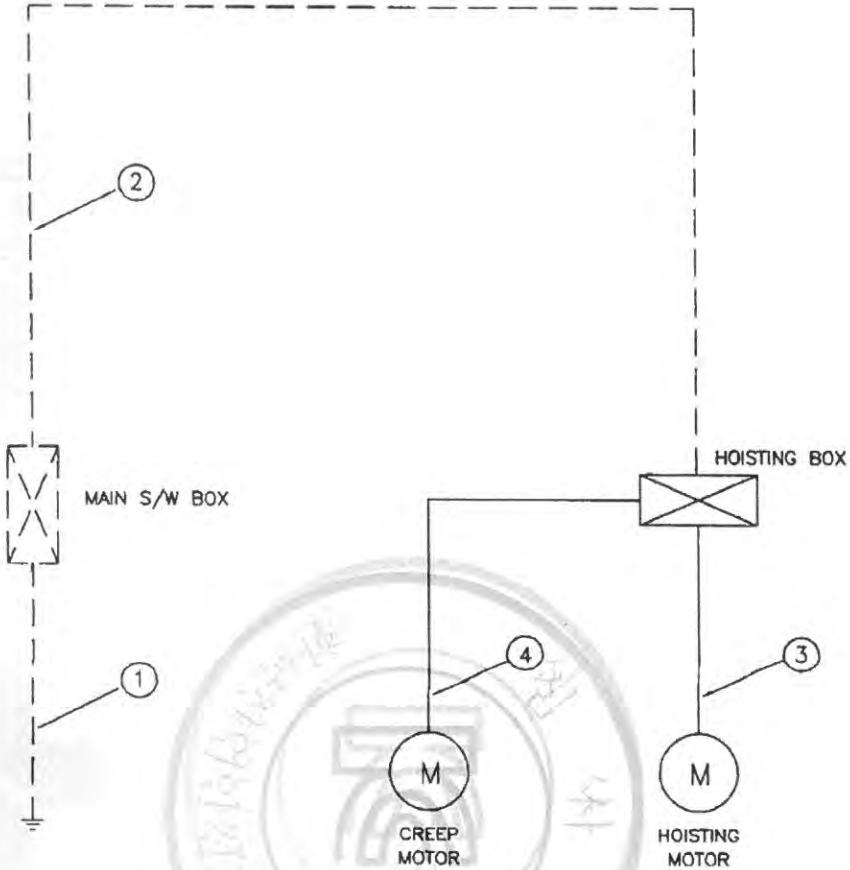


* CV CABLE 4C중 1C는 EARTH로 사용함.

– NOTE –

1. 전동기 외함, 제어반의 프레임 등은 접지하여 그 접지 저항은

400V 미만 : 100오옴 이하일것.(3종 접지)

400V 이상 : 10오옴 이하일것.(특 3종접지)

2.MAIN S/W BOX는 3종 접지 요.

**등전위접지**

1.전기장비와 기계의 노출된 모든 도전부는 보호본딩회로에 연결되어야 하며 적절한 접지연속성 기능이 유지되야함.

2. 보호본딩회로에는 개폐기, 과전류보호장치가 부착되지 않아야 한다.

| 시험대상 전선의 최소 유효단면적 | 최고전압강하(V) |
|---|---|
| 1.0 | 3.3 |
| 1.5 | 2.6 |
| 2.5 | 1.6 |
| 4.0 | 1.4 |
| >6.0 | 1.0 |

— — — — — USER SCOPE

———— KUKDONG SCOPE

| MK | DATE | REVISIONS | CHK. | APP. |
|---|---|---|---|---|
| 4 | | | | |
| 3 | | | | |
| 2 | | | | |
| 1 | | | | |

| CUSTOMER | | DRAWING | DESIGN | CHECKED | APPROVED | SCALE | DATE | ORDER NO. |
|---|---|---|---|---|---|---|---|---|
| DRAWING TITLE | EARTH DETAILS DRAWING | | | | | NONE | 2003.07.01 | |
| | | | | | | DWG. NO | KDCS-EC001 | |

불법복제 및 배포금지
불법복제 및 배포금지

| 1 | 3 | 4 | 5 | 6 | 7 | 8 | 9 | 11 | 12 | 13 | 14 | 15 | 16 | 17 | 19 | 20 |
|---|---|---|---|---|---|---|---|---|---|---|---|---|---|---|---|---|
| POWER CIRCUIT | | | | | | | | | | | | | | | | ADR'S NO. |
| TRAVELLING POWER SUPPLY SYSTEM | | | | | | | | | | | | | | | | A1 |

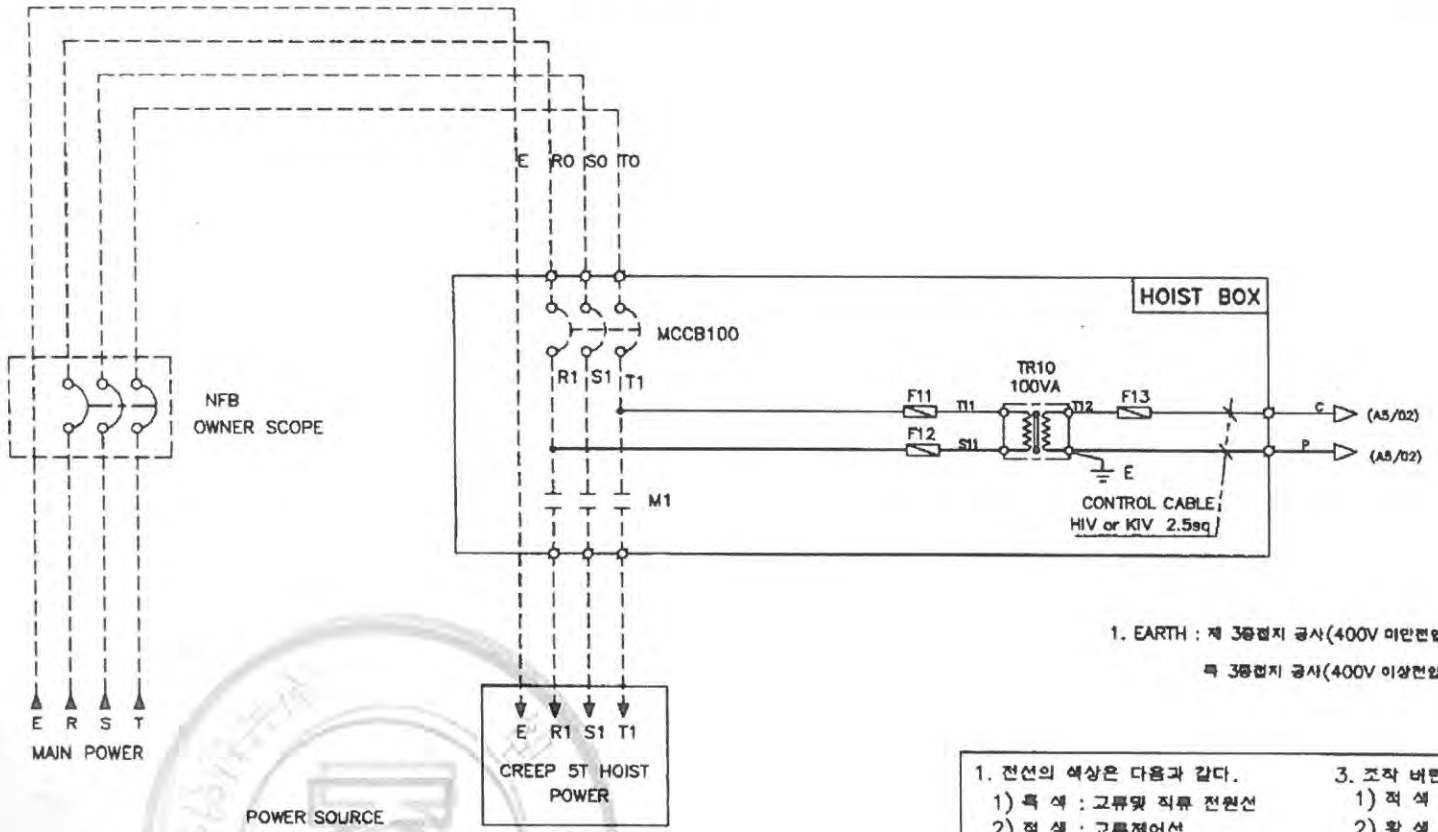


1. EARTH : 제 3종접지 공사(400V 미만전압 : 100 OHM 이하)

특 3종접지 공사(400V 이상전압 : 10 OHM 이하)

POWER SOURCE
AC 3ø 60Hz

| SELECTION | VOLTAGE | F11 F12 | F13 | MCCB100 | TR10 |
|---|---|---|---|---|---|
| | 220V | 2A | 3A | 53AF/40AT | 220/110,120V 100VA |
| | 380V | 1A | 3A | 33AF/30AT | 380/110,120V 100VA |
| | 440V | 1A | 3A | 33AF/30AT | 440/110,120V 100VA |
| | 460V | 1A | 3A | 33AF/30AT | 460/110,120V 100VA |
| | 480V | 1A | 3A | 33AF/30AT | 480/110,120V 100VA |

1. 전선의 색상은 다음과 같다.
   1) 흑 색 : 고류및 직류 전원선
   2) 적 색 : 고류제어선
   3) 청 색 : 직류제어선
   4) 녹색 또는 녹색과 황색 혼용 : 접지
2. 표시등의 색상은 다음과 같다.
   1) 적 색 : 비상
   2) 황 색 : 비정상
   3) 녹 색 : 정상
   4) 청색 : 의무
   5) 흰색 : 중립
3. 조작 버튼의 색상은 다음과 같다.
   1) 적 색 : 비상
   2) 황 색 : 비정상
   3) 청 색 : 의무
   4) 흰색, 회색 또는 흑색 : 지정된 의미없음

| MK | DATE | REVISIONS | CHK. | APP. |
|---|---|---|---|---|
| ⚠ | | | | |
| ⚠ | | | | |
| ⚠ | | | | |
| ⚠ | | | | |

| CUSTOMER | | DRAWING | DESIGN | CHECKED | APPROVED | SCALE | DATE | ORDER NO. |
|---|---|---|---|---|---|---|---|---|
| DRAWING TITLE | MAIN POWER CIRCUIT 1 | | | | | NONE | | |
| | DIAGRAM | 극동호이스트 주식회사 KUK DONG HOIST CO., LTD. | | | | DWG. NO | KDC5E001 | |

불법복제 및 배포금지
불법복제 및 배포금지

| 1 | 3 | 4 | 5 | 6 | 7 | 8 | 9 | 11 | 12 | 13 | 14 | 15 | 16 | 17 | 19 | 20. |
|---|---|---|---|---|---|---|---|---|---|---|---|---|---|---|---|---|

ADR'S NO.

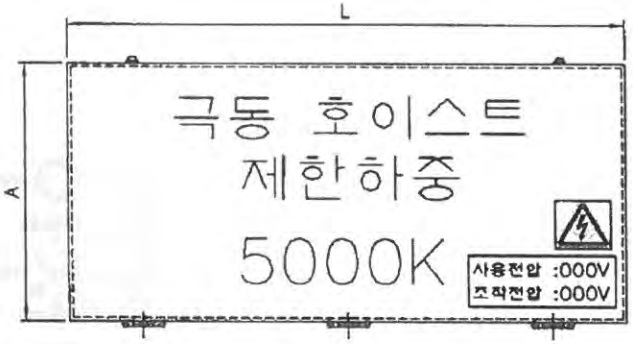


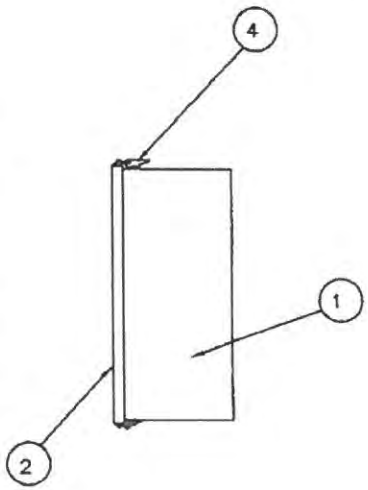


| NO | DESCRIPTION | MT'L | REMARKS |
|---|---|---|---|
| 1 | PANEL CASE | SPC | 1.6t |
| 2 | PANEL COVER | SPC | 1.6t |
| 3 | HINGE | PUR' | |
| 4 | CLAMP | PUR' | |
| 5 | SPONGE | PUR' | |

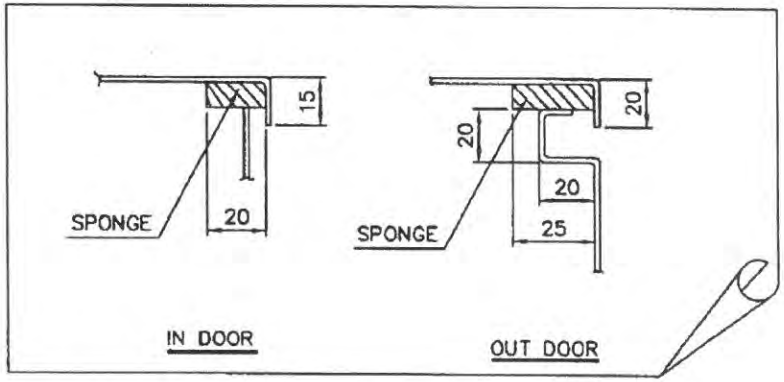

N O T E

1.PROTECTION DEGREE ;

A, INDOOR TYPE : DUST PROOF

B, OUT DOOR TYPE : SPLASH PROOF

2.FINAL PAINTING COLOR (MUNSELL NO.)

A. IN SIDE : 10B 3/5

B. OUT SIDE : 10B 3/5

3.PAINTING THICKNESS : ABOVE 40 um

4.APPLICATION VOLTAGE : 220V,380V,440V,460V,480V

5.제어용 전선 : 2.5sq KIV,HIV

6.외함 개방 구조는 다음과 같다.

1) 외함 개방시 충전부분이 차단되도록 한다.

2) 외함 개방 후 충전되어있는 부분은 IP2X 이상의 직접 접촉 방호가 되어있을것.

| SELECTION | HOIST CAPACITY | DESCRIPTION | IN DOOR | | | OUT DOOR | | | REMARK |
|---|---|---|---|---|---|---|---|---|---|
| | | | A | B | L | A | B | L | |
| | 5 TON | NORMAL | 360 | 170 | 790 | 360 | 170 | 810 | |
| | | CREEP | 360 | 170 | 790 | 360 | 170 | 810 | |

| MK | DATE | REVISIONS | CHK. | APP. |
|---|---|---|---|---|
| 4 | | | | |
| 3 | | | | |
| 2 | | | | |
| 1 | | | | |

| CUSTOMER | | DRAWING | DESIGN | CHECKED | APPROVED | SCALE | DATE | ORDER NO. |
|---|---|---|---|---|---|---|---|---|
| DRAWING TITLE | HOISTING CONTROL BOX | | | | | NONE | | |
| | LAY-OUT | 극동호이스트 주식회사 KUK DONG HOIST CO., LTD. | | | | DWG. NO | KDC5EB00 | |

무단배포 및 재배포 금지

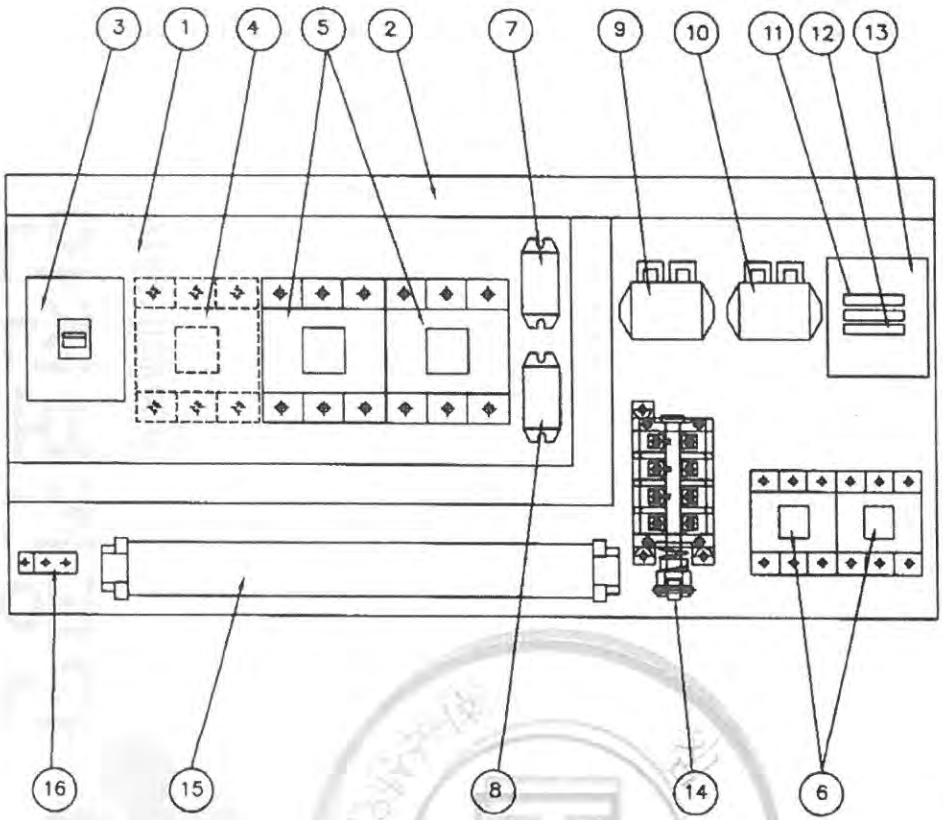


| NO | DESCRIPTION | SPECIFICATION | Q'TY | REMARK |
|---|---|---|---|---|
| 1 | CHASSIS PLATE | | 1 | 아 연 도 금 |
| 2 | CABLE DUCT | – | 1 | |
| 3 | N.F.B | 53AF/40AT | 1 | HOISTING |
| 4 | MAGNET CONTACTOR | DMC48C | 1 | MAIN MAG. |
| 5 | MAGNET CONTACTOR | DMC65C | 2 | HOISTING |
| 6 | MAGNET CONTACTOR | DMC22C | 2 | CREEP HOIST |
| 7 | SILICON RECTIFIER | SR-60 | 1 | HOISTING |
| 8 | SILICON RECTIFIER | SR-30 | 1 | CREEP HOIST |
| 9 | E.O.C.R | SS-30 | 1 | HOISTING |
| 10 | E.O.C.R | SS-30 | 1 | CREEP HOIST |
| 11 | FUSE | 2 A | 2 | |
| 12 | FUSE | 3 A | 1 | |
| 13 | TRANSFORMER | 220V/110V(120V), 100VA | 1 | |
| 14 | UPPER LIMITER | AC 600V, 75A | 1 | LS-1,2 |
| 15 | TERMINAL BLOCK | 60A,15A | | |
| 16 | EARTH TERMINAL | 3t×20×50 | 1 | |

NOTE

1. UPPER LIMIT LS-1,LS-2의 접점 허용 전류. 용량. : AC 600V, 75A
2. POWER SOURCE : AC. 3ø 220V 60HZ
3. EARTH TERMINAL RESISTANCE : 0.018Ω

NOTE

1. 전선의 색상은 다음과 같다.
   1) 흑색 : 고류 및 직류 전원선로
   2) 적색 : 고류제어선
   3) 주황색 : 외부 전원에서 공급되는 연동장치 제어회로
   4) 녹색 또는 녹색과 황색 혼용 : 접지선
   5) 청색 : 직류 제어선로
2. CABLE MATERIAL : KIV OR EQUIVALENT / MIN SIZE : 2.5sq
3. 제어용 전선 : 2.5mm KIV,HIV
4. 제작시 다소 변경 될수있음.
5. 외함 개방구조는 다음과 같을것.
   1) 외함 개방시 충전부분이 차단되도록 할것.
   2) 외함 개방후 충전되어있는 부분은 IP2X 이상의 직접 접촉 방호가 되어있을것.

| MK | DATE | REVISIONS | CHK. | APP. |
|---|---|---|---|---|
| | | | | |
| | | | | |
| | | | | |
| | | | | |

| CUSTOMER | | DRAWING | DESIGN | CHECKED | APPROVED | SCALE | DATE | ORDER NO. |
|---|---|---|---|---|---|---|---|---|
| DRAWING TITLE | CREEP HOIST CONTROL BOX | | | | | NONE | | |
| | ARRANGEMENT DRAWING | 극동호이스트 주식회사 KUK DONG HOIST CO., LTD. | | | | DWG. NO | KDC5BA21 | |

1. 1 3 4 5 6 7 8 9 11 12 13 14 15 16 17 19 20.
ADR'S NO.

지은표배 금 배표제 및 배표금지

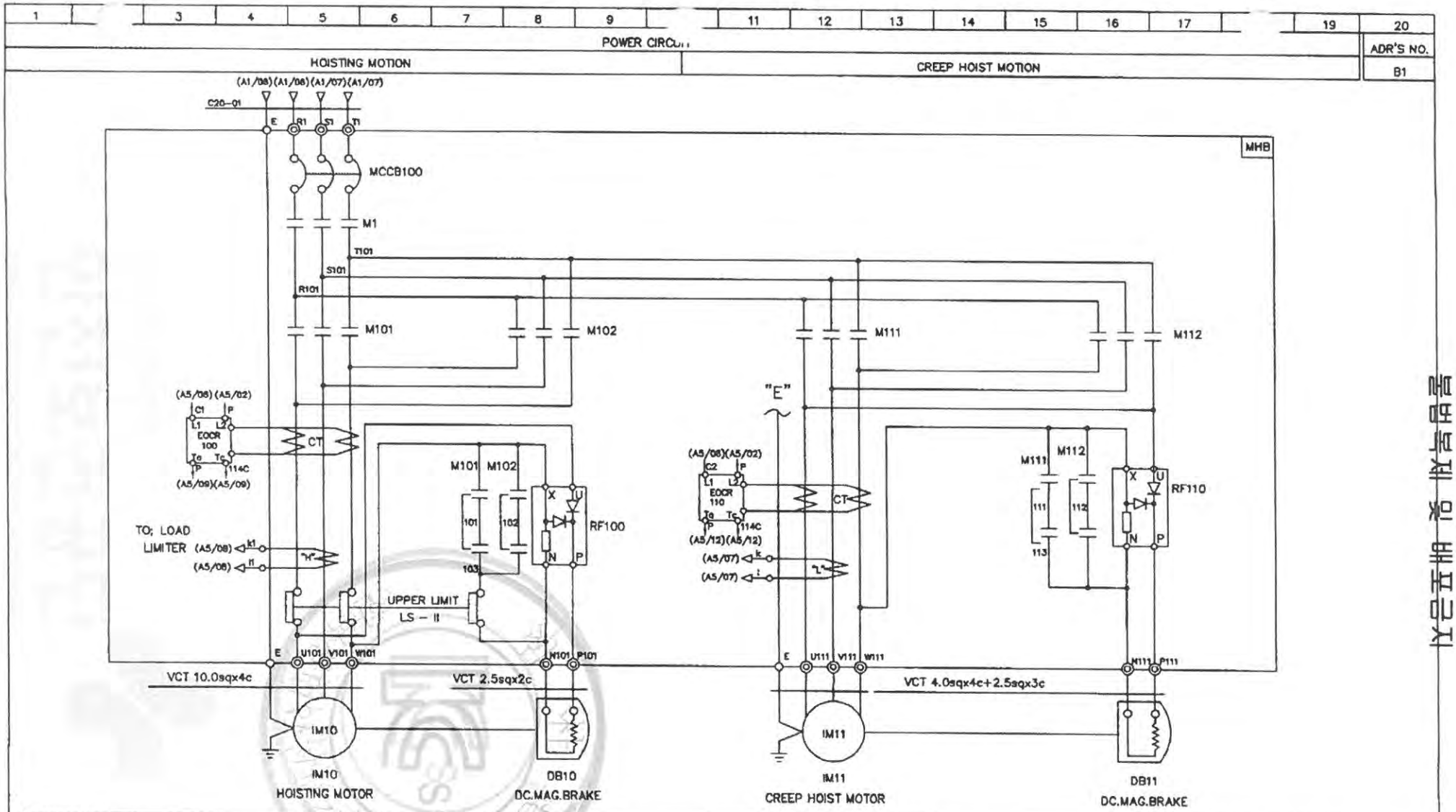


| SPECIFICATION / SYMBOLS | HOISTING POWER | HOISTING MOTOR | CREEP MOTOR | DC.MAG' BRAKE | NO FUSE BREAKER | TRANSFORMER | FUSE | | MAIN MAGNET | MAGNET CONTACTOR | | UPPER LIMIT | ELECTRIC OVER CURRENT RELAY | | SILICON RECTIFIER | | LOAD LIMITER | CABLE |
|---|---|---|---|---|---|---|---|---|---|---|---|---|---|---|---|---|---|---|
| DESCRIPTION | HOIST | IM 10 | IM 11 | DB10, 11 | MCCB100 | TR 1 | F11,F12 | F13 | M1 | M101,M102 | M111,M112 | LS-I, LS-II | EOCR100 | EOCR110 | RF100 | RF110 | LOAD LIMITER | C20-01 |
| | 5TON AC3PH 220V 60Hz | 5.5KWx6P | 1.0KWx6P | DC 100V | ABS-53AF/40A | 220/110V,120V,100VA | 2A | 3A | DMC48C | DMC65C | DMC22C | AC 600V 75A | SS-30 | SS-30 | SR-60 | SR-30 | JDL-100 | VFCT 16.0sqx4c |
| SELECTION / MAKER | KUK DONG | | | | LS | SHINHAN | - | | DONG-A | | | KUK DONG | ASECO | | | | JUNGHO | DONGIL |

| MK | DATE | REVISIONS | CHK. | APP. |
|---|---|---|---|---|
| 4 | | | | |
| 3 | | | | |
| 2 | | | | |
| 1 | | | | |

| CUSTOMER | | DRAWING | DESIGN | CHECKED | APPROVED | SCALE | DATE | ORDER NO. |
|---|---|---|---|---|---|---|---|---|
| DRAWING TITLE | CREEP HOISTING POWER & CONTROL | | | | | NONE | | |
| | CIRCUIT DIAGRAM | 극동호이스트 주식회사 KUK DONG HOIST CO., LTD. | | | | DWG. NO | KDC5E21 | |

불법복제 및 배포금지
무단복제 및 배포금지

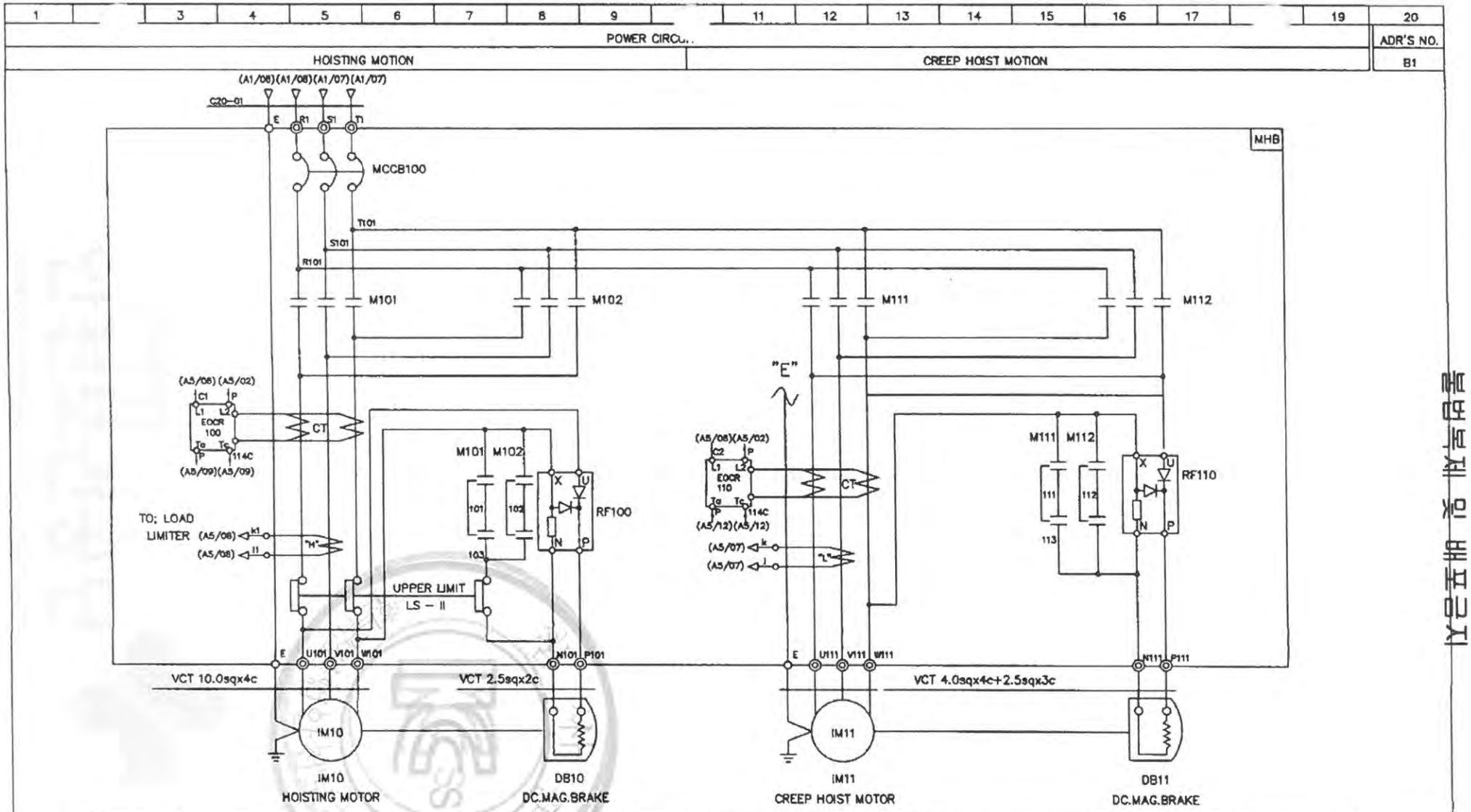


| SPECIFICATION / SYMBOLS / DESCRIPTION | HOISTING POWER | HOISTING MOTOR | CREEP MOTOR | DC.MAG BRAKE | NO FUSE BREAKER | TRANSFORMER | FUSE | | MAGNET CONTACTOR | | UPPER LIMIT | ELECTRIC OVER CURRENT RELAY | | SILICON RECTIFIER | | LOAD LIMITER | CABLE |
|---|---|---|---|---|---|---|---|---|---|---|---|---|---|---|---|---|---|
| | HOIST | IM 10 | IM 11 | DB10, 11 | MCCB100 | TR 1 | F11,F12 | F13 | M101,M102 | M111,M112 | LS-I, LS-II | EOCR100 | EOCR110 | RF100 | RF110 | LOAD LIMITER | C20-01 |
| | 5TON AC3PH 220V 60Hz | 5.5KWx6P | 1.0KWx6P | DC 100V | ABS-53AF/40A | 220/110V,120V,100VA | 2A | 3A | DMC65C | DMC22C | AC 600V 75A | SS-30 | SS-30 | SR-60 | SR-30 | JDL-100 | VFCT16.0sqx4c |
| SELECTION / MAKER | KUKDONG | | | | LS | SHINHAN | - | | DONG-A | | KUK DONG | ASECO | | | | JUNGHO | DONGIL |

| MK | DATE | REVISIONS | CHK. | APP. |
|---|---|---|---|---|
| 4 | | | | |
| 3 | | | | |
| 2 | | | | |
| 1 | | | | |

| CUSTOMER | | DRAWING | DESIGN | CHECKED | APPROVED | SCALE | DATE | ORDER NO. |
|---|---|---|---|---|---|---|---|---|
| DRAWING TITLE | CREEP HOISTING POWER & CONTROL | | | | | NONE | | |
| | CIRCUIT DIAGRAM | KD 국동호이스트 주식회사 KUK DONG HOIST CO., LTD. | | | | DWG. NO | KDC5E22 | |

무단배포 및 배포금지

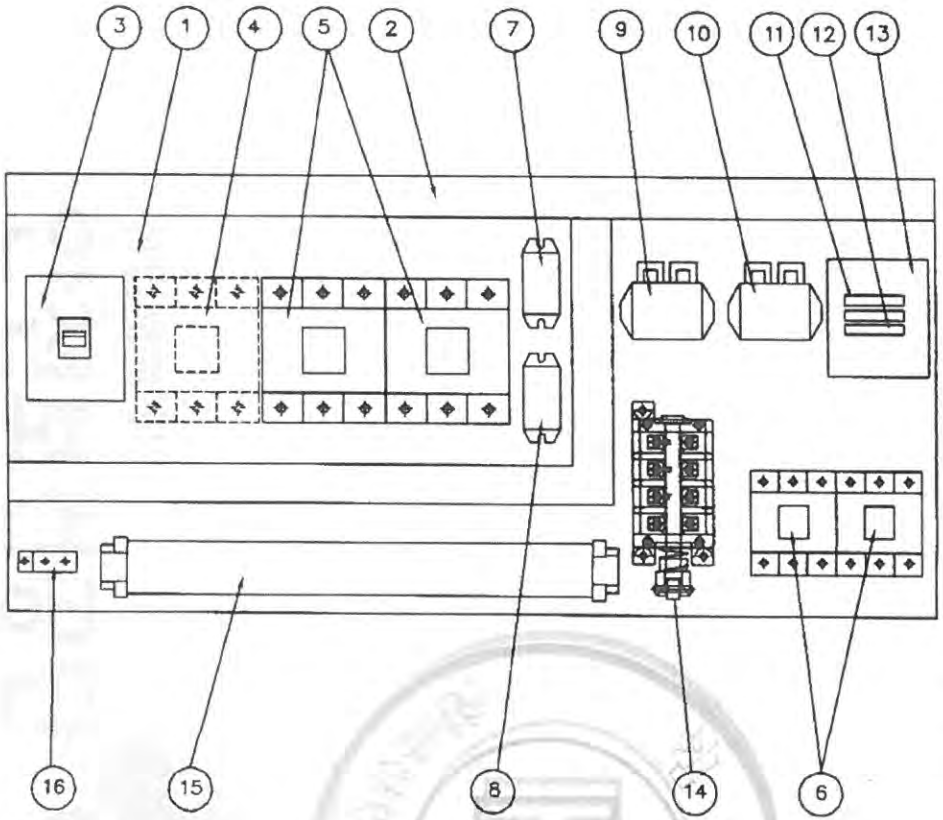


| NO | DESCRIPTION | SPECIFICATION | Q'TY | REMARK |
|---|---|---|---|---|
| 1 | CHASSIS PLATE | | 1 | 아 연 도 금 |
| 2 | CABLE DUCT | – | 1 | |
| 3 | N.F.B | 33AF/30AT | 1 | HOISTING |
| 4 | MAGNET CONTACTOR | DMC32C | 1 | MAIN MAG. |
| 5 | MAGNET CONTACTOR | DMC48C | 2 | HOISTING |
| 6 | MAGNET CONTACTOR | DMC22C | 2 | CREEP HOIST |
| 7 | SILICON RECTIFIER | SR-60 | 1 | HOISTING |
| 8 | SILICON RECTIFIER | SR-30 | 1 | CREEP HOIST |
| 9 | E.O.C.R | SS-30 | 1 | HOISTING |
| 10 | E.O.C.R | SS-05 | 1 | CREEP HOIST |
| 11 | FUSE | 1 A | 2 | |
| 12 | FUSE | 3 A | 1 | |
| 13 | TRANSFORMER | 380V/110V(120V), 100VA | 1 | |
| 14 | UPPER LIMITER | AC 600V, 75A | 1 | LS-1,2 |
| 15 | TERMINAL BLOCK | 60A,15A | | |
| 16 | EARTH TERMINAL | 3tx20x50 | 1 | |

NOTE

1. UPPER LIMIT LS-1,LS-2의 접점 허용 전류 용량. : AC 600V, 75A
2. POWER SOURCE : AC. 3ø 380V 60HZ
3. EARTH TERMINAL RESISTANCE : 0.018Ω

NOTE

1. 전선의 색상은 다음과 같다.
   1) 흑색 : 고류 및 직류 전원선로
   2) 적색 : 고류제어선
   3) 주황색 : 외부 전원에서 공급되는 연동장치 제어회로
   4) 녹색 또는 녹색과 황색 혼용 : 접지선
   5) 청색 : 직류 제어선로
2. CABLE MATERIAL : KIV OR EQUIVALENT, MIN SIZE : 2.5sq
3. 제어용 전선 : 2.5mm KIV,HIV
4. 제작시 다소 변경 될수있음.
5. 외함 개방구조는 다음과 같을것.
   1) 외함 개방시 충전부분이 차단되도록 할것.
   2) 외함 개방후 충전되어있는 부분은 IP2X 이상의 직접 접촉 방호가 되어있을것.

| MK | DATE | REVISIONS | CHK. | APP. |
|---|---|---|---|---|
| | | | | |
| | | | | |
| | | | | |
| | | | | |

| CUSTOMER | | DRAWING | DESIGN | CHECKED | APPROVED | SCALE | DATE | ORDER NO. |
|---|---|---|---|---|---|---|---|---|
| DRAWING TITLE | CREEP HOIST CONTROL BOX | | | | | NONE | | |
| | ARRANGEMENT DRAWING | KD 극동호이스트 주식회사 KUK DONG HOIST CO., LTD. | | | | DWG. NO | KDC5BA31 | |

무단배포 및 배포금지

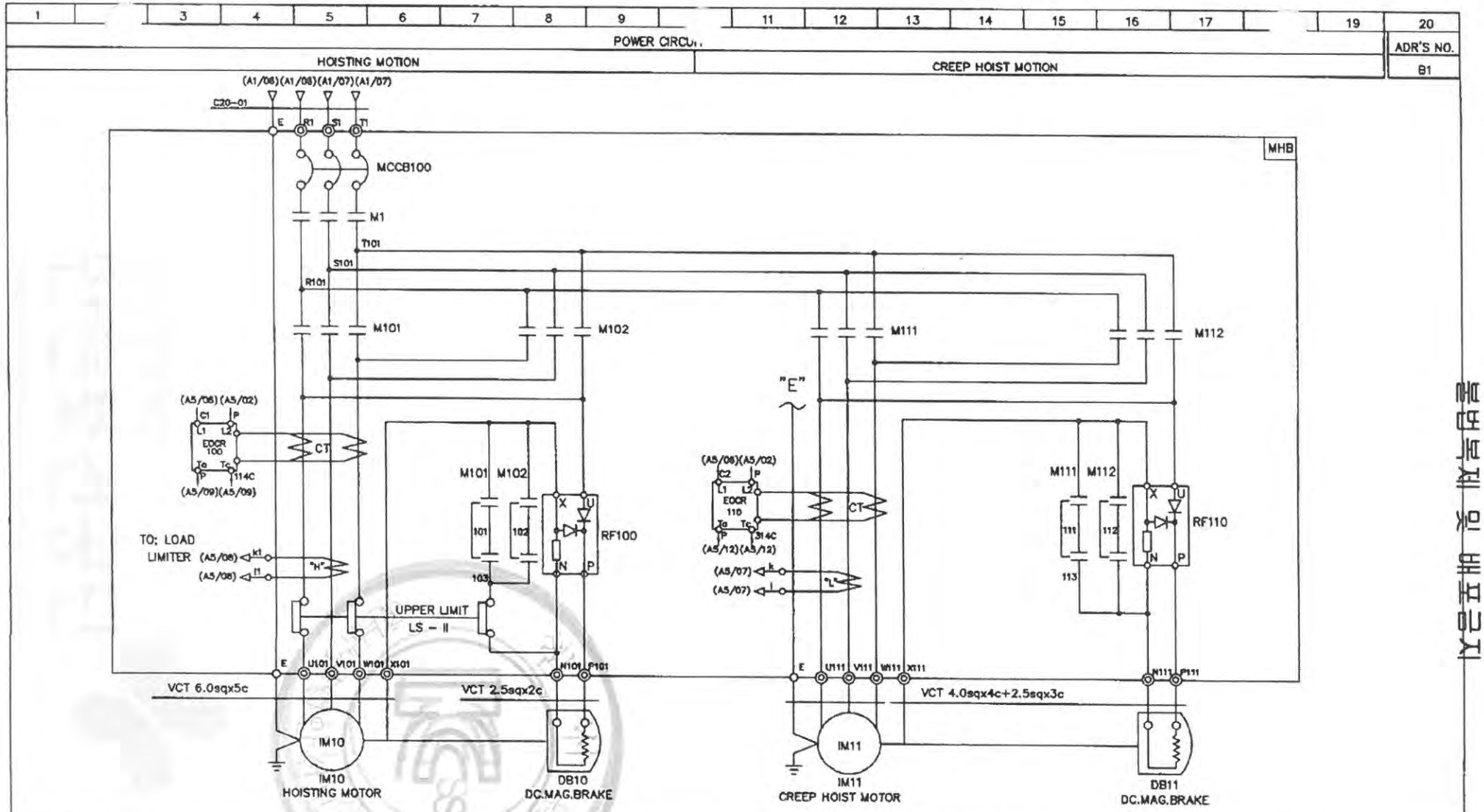


| SPECIFICATION / SYMBOLS | HOISTING POWER | HOISTING MOTOR | CREEP MOTOR | DC.MAG BRAKE | NO FUSE BREAKER | TRANSFORMER | FUSE | | MAIN MAGNET | MAGNET CONTACTOR | | UPPER LIMIT | ELECTRIC OVER CURRENT RELAY | | SILICON RECTIFIER | | LOAD LIMITER | CABLE |
|---|---|---|---|---|---|---|---|---|---|---|---|---|---|---|---|---|---|---|
| DESCRIPTION | HOIST | IM 10 | IM 11 | DB10, 11 | MCCB100 | TR 1 | F11,F12 | F13 | M1 | M101,M102 | M111,M112 | LS-I, LS-II | EOCR100 | EOCR110 | RF100 | RF110 | LOAD LIMITER | C20-01 |
| | 5TON AC 3PH 380V 60Hz | 5.5KW x 6P | 1.0KWx6P | DC 100V | DBE-33AF/30A | 380V/110V,120V, 100VA | 1A | 3A | DOC-32P | DOC-48P | DOC-22P | AC 600V 75A | SS-30 | SS-05 | SR-60 | SR-30 | JDL-100 | VFCT 6.0sqx4c |
| SELECTION / MAKER | KUKDONG | | | | DAERYUK | SHINHAN | - | | DAERYUK | | | KUKDONG | ASECO | | | | JUNGHO | DONGIL |

| MK | DATE | REVISIONS | CHK. | APP. |
|---|---|---|---|---|
| 4 | | | | |
| 3 | | | | |
| 2 | | | | |
| 1 | | | | |

| CUSTOMER | | DRAWING | DESIGN | CHECKED | APPROVED | SCALE | DATE | ORDER NO. |
|---|---|---|---|---|---|---|---|---|
| DRAWING TITLE | CREEP HOISTING POWER CONTROL CIRCUIT DIAGRAM | | | | | NONE | | |
| | | KD 국동호이스트 주식회사 KUK DONG HOIST CO., LTD. | | | | DWG. NO | KDC5E31 | |

불법복제 및 배포금지
불법복제 및 배포금지

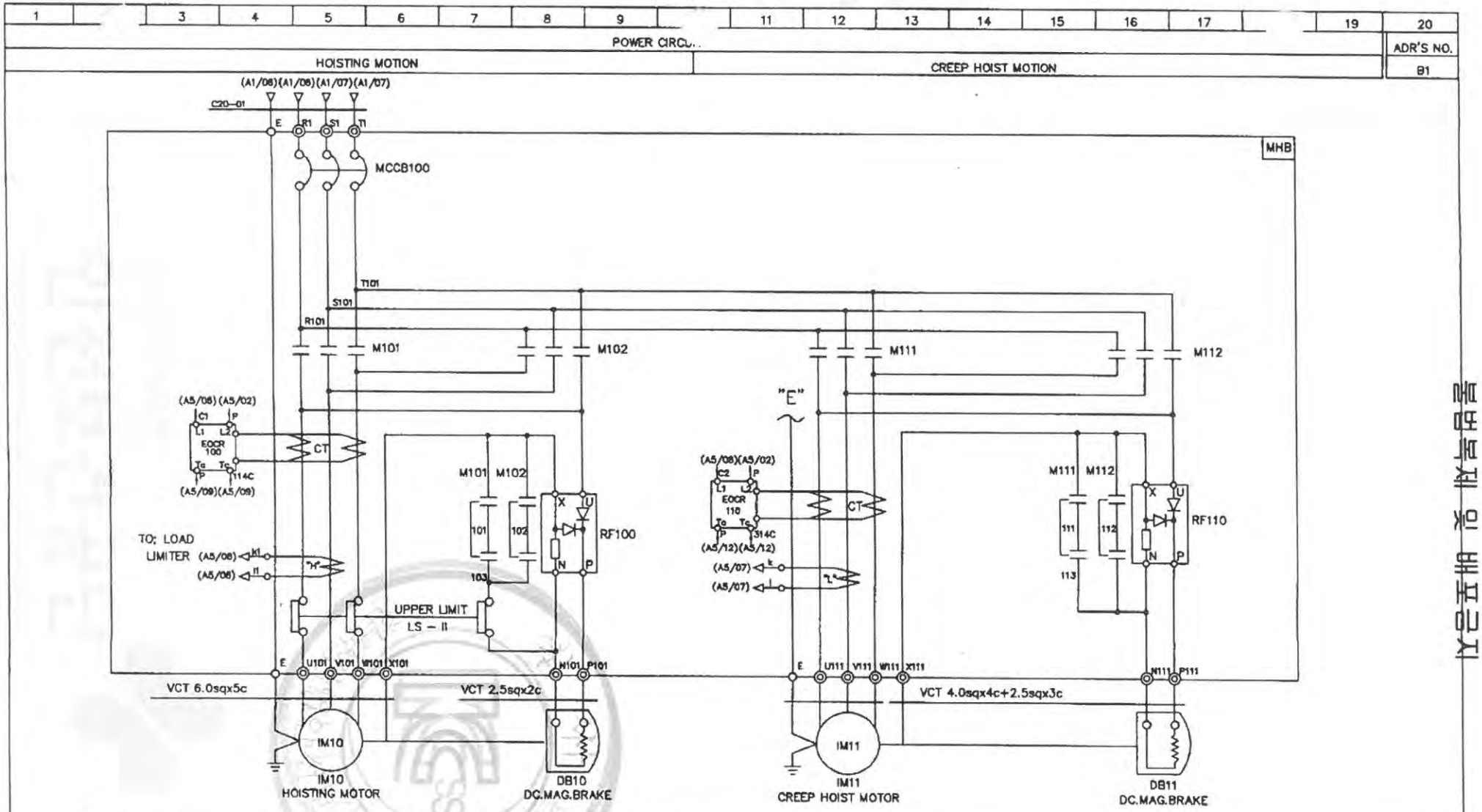


| SPECIFICATION / SYMBOLS | HOISTING POWER | HOISTING MOTOR | CREEP MOTOR | DC.MAG BRAKE | NO FUSE BREAKER | TRANSFORMER | FUSE | | MAGNET CONTACTOR | | UPPER LIMIT | ELECTRIC OVER CURRENT RELAY | | SILICON RECTIFIER | | LOAD LIMITER | CABLE |
|---|---|---|---|---|---|---|---|---|---|---|---|---|---|---|---|---|---|
| DESCRIPTION | HOIST | IM 10 | IM 11 | DB10, 11 | MCCB100 | TR 1 | F11,F12 | F13 | M101,M102 | M111,M112 | LS-I, LS-II | EOCR100 | EOCR110 | RF100 | RF110 | LOAD LIMITER | C20-01 |
| | 5TON AC 3PH 380V 60Hz | 5.5KW x 6P | 1.0KWx6P | DC 100V | DBE-33AF/30A | 380V/110V,120V, 100VA | 1A | 3A | DOC-48P | DOC-22P | AC 600V 75A | SS-30 | SS-05 | SR-60 | SR-30 | JDL-100 | VFCT 6.0sqx4c |
| SELECTION / MAKER | KUKDONG | | | | DAERYUK | SHINHAN | - | | DAERYUK | | KUKDONG | ASECO | | | | JUNGHO | DONGIL |

| MK | DATE | REVISIONS | CHK. | APP. |
|---|---|---|---|---|
| 4 | | | | |
| 3 | | | | |
| 2 | | | | |
| 1 | | | | |

| CUSTOMER | | DRAWING | DESIGN | CHECKED | APPROVED | SCALE | DATE | ORDER NO. |
|---|---|---|---|---|---|---|---|---|
| DRAWING TITLE | CREEP HOISTING POWER CONTROL CIRCUIT DIAGRAM | | | | | NONE | | |
| | | | | | | DWG. NO | KDC5E32 | |

시운전배포 및 제품출하

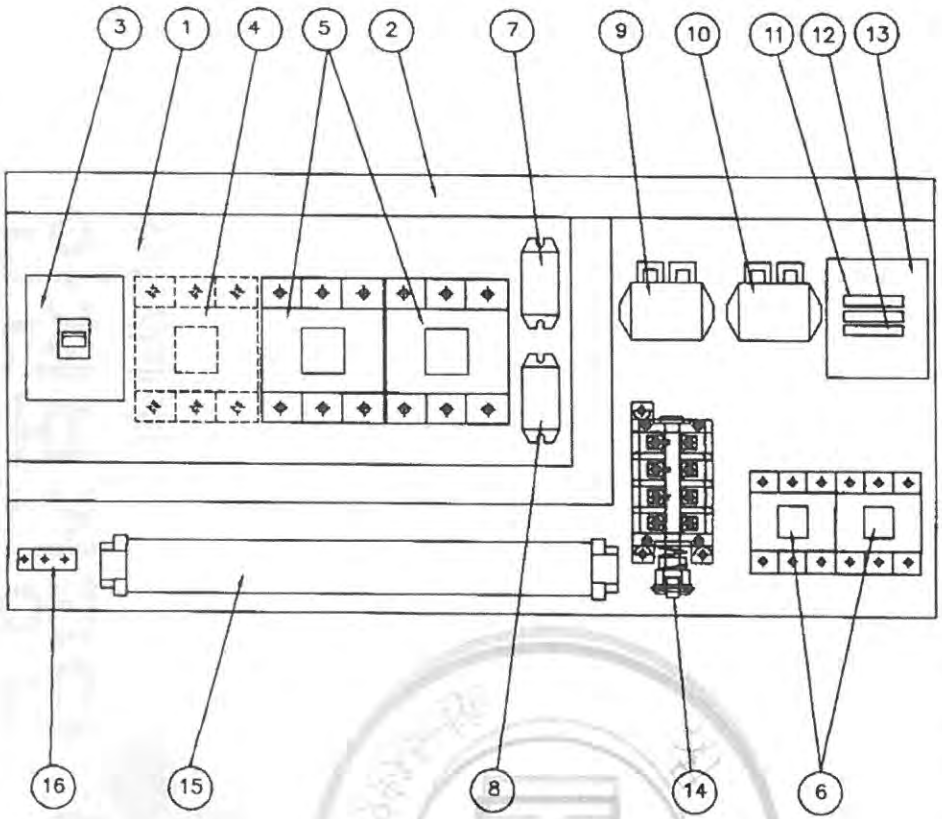


| NO | DESCRIPTION | SPECIFICATION | Q'TY | REMARK |
|---|---|---|---|---|
| 1 | CHASSIS PLATE | | 1 | 아 연 도 금 |
| 2 | CABLE DUCT | – | 1 | |
| 3 | N.F.B | 33AF/30AT | 1 | HOISTING |
| 4 | MAGNET CONTACTOR | DMC32C | 1 | MAIN MAG. |
| 5 | MAGNET CONTACTOR | DMC48C | 2 | HOISTING |
| 6 | MAGNET CONTACTOR | DMC22C | 2 | CREEP HOIST |
| 7 | SILICON RECTIFIER | SR-60 | 1 | HOISTING |
| 8 | SILICON RECTIFIER | SR-30 | 1 | CREEP HOIST |
| 9 | E.O.C.R | SS-30 | 1 | HOISTING |
| 10 | E.O.C.R | SS-05 | 1 | CREEP HOIST |
| 11 | FUSE | 1 A | 2 | |
| 12 | FUSE | 3 A | 1 | |
| 13 | TRANSFORMER | 440V/110V(120V), 100VA | 1 | |
| 14 | UPPER LIMITER | AC 600V, 75A | 1 | LS-1,2 |
| 15 | TERMINAL BLOCK | 60A,15A | | |
| 16 | EARTH TERMINAL | 3tx20x50 | 1 | |

NOTE

1. UPPER LIMIT LS-1,LS-2의 접점 허용 전류. 용량. : AC 600V, 75A
2. POWER SOURCE : AC. 3ø 440V 60HZ
3. EARTH TERMINAL RESISTANCE : 0.018Ω

NOTE

1. 전선의 색상은 다음과 같다.
   1) 흑색 : 교류 및 직류 전원선로
   2) 적색 : 교류제어선
   3) 주황색 : 외부 전원에서 공급되는 연동장치 제어회로
   4) 녹색 또는 녹색과 황색 혼용 : 접지선
   5) 청색 : 직류 제어선로
2. CABLE MATERIAL : KIV OR EQUIVALENT, MIN SIZE : 2.5sq
3. 제어용 전선 : 2.5mm KIV,HIV
4. 제작시 다소 변경 될수있음.
5. 외함 개방구조는 다음과 같을것.
   1) 외함 개방시 충전부분이 차단되도록 할것.
   2) 외함 개방후 충전되어있는 부분은 IP2X 이상의 직접 접촉 방호가 되어있을것.

| MK | DATE | REVISIONS | CHK. | APP. |
|---|---|---|---|---|
| | | | | |

| CUSTOMER | | DRAWING | DESIGN | CHECKED | APPROVED | SCALE | DATE | ORDER NO. |
|---|---|---|---|---|---|---|---|---|
| DRAWING TITLE | CREEP HOIST CONTROL BOX | | | | | NONE | | |
| | ARRANGEMENT DRAWING | 극동호이스트 주식회사 KUK DONG HOIST CO., LTD. | | | | DWG. NO | KDC5BA41 | |

ADR'S NO.

무단배포 및 배포금지

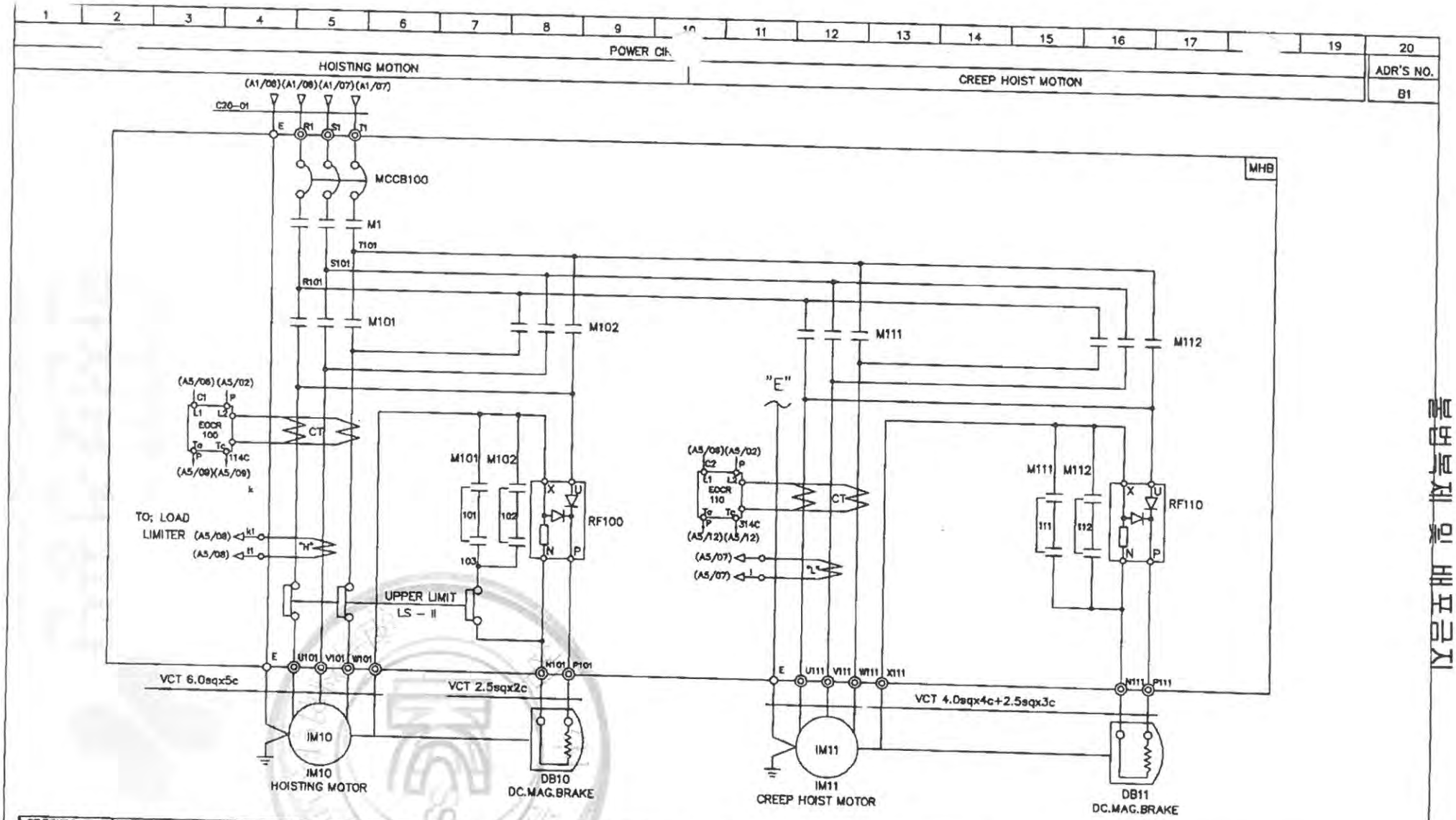


| SPECIFICATION / SYMBOLS / DESCRIPTION / SELECTION / MAKER | HOISTING POWER | HOISTING MOTOR | CREEP MOTOR | DC.MAG BRAKE | NO FUSE BREAKER | TRANSFORMER | FUSE | | MAIN MAGNET | MAGNET CONTACTOR | | UPPER LIMIT | ELECTRIC OVER CURRENT RELAY | | SILICON RECTIFIER | | LOAD LIMITER | CABLE |
|---|---|---|---|---|---|---|---|---|---|---|---|---|---|---|---|---|---|---|
| DESCRIPTION | HOIST | IM 10 | IM 11 | DB10, 11 | MCCB100 | TR 1 | F11,F12 | F13 | M1 | M101,M102 | M111,M112 | LS-I, LS-II | EOCR100 | EOCR110 | RF100 | RF110 | LOAD LIMITER | C20-01 |
| SELECTION | 5TON AC 3PH 440V 60Hz | 5.5KW x 6P | 1.0KWx6P | DC 100V | ABE-33AF/30A | 440/110V,120V,100VA | 1A | 3A | DMC32C | DMC48C | DMC22C | AC 600V 75A | SS-30 | SS-05 | SR-60 | SR-30 | JDL-100 | VFCT 6sqx4c |
| MAKER | KUKDONG | | | | LS | SHINHAN | – | | DONG-A | | | KUKDONG | ASECO | | | | JUNGHO | DONGIL |

| MK | DATE | REVISIONS | CHK. | APP. |
|---|---|---|---|---|
| 4 | | | | |
| 3 | | | | |
| 2 | | | | |
| 1 | | | | |

| CUSTOMER | | DRAWING | DESIGN | CHECKED | APPROVED | SCALE | DATE | ORDER NO. |
|---|---|---|---|---|---|---|---|---|
| DRAWING TITLE | CREEP HOISTING POWER CONTROL CIRCUIT DIAGRAM | | | | | NONE | | |
| | | 국동호이스트 주식회사 KUK DONG HOIST CO., LTD. | | | | DWG. NO | KDC5E41 | |

불법복제 및 배포금지
무단복제 및 배포금지

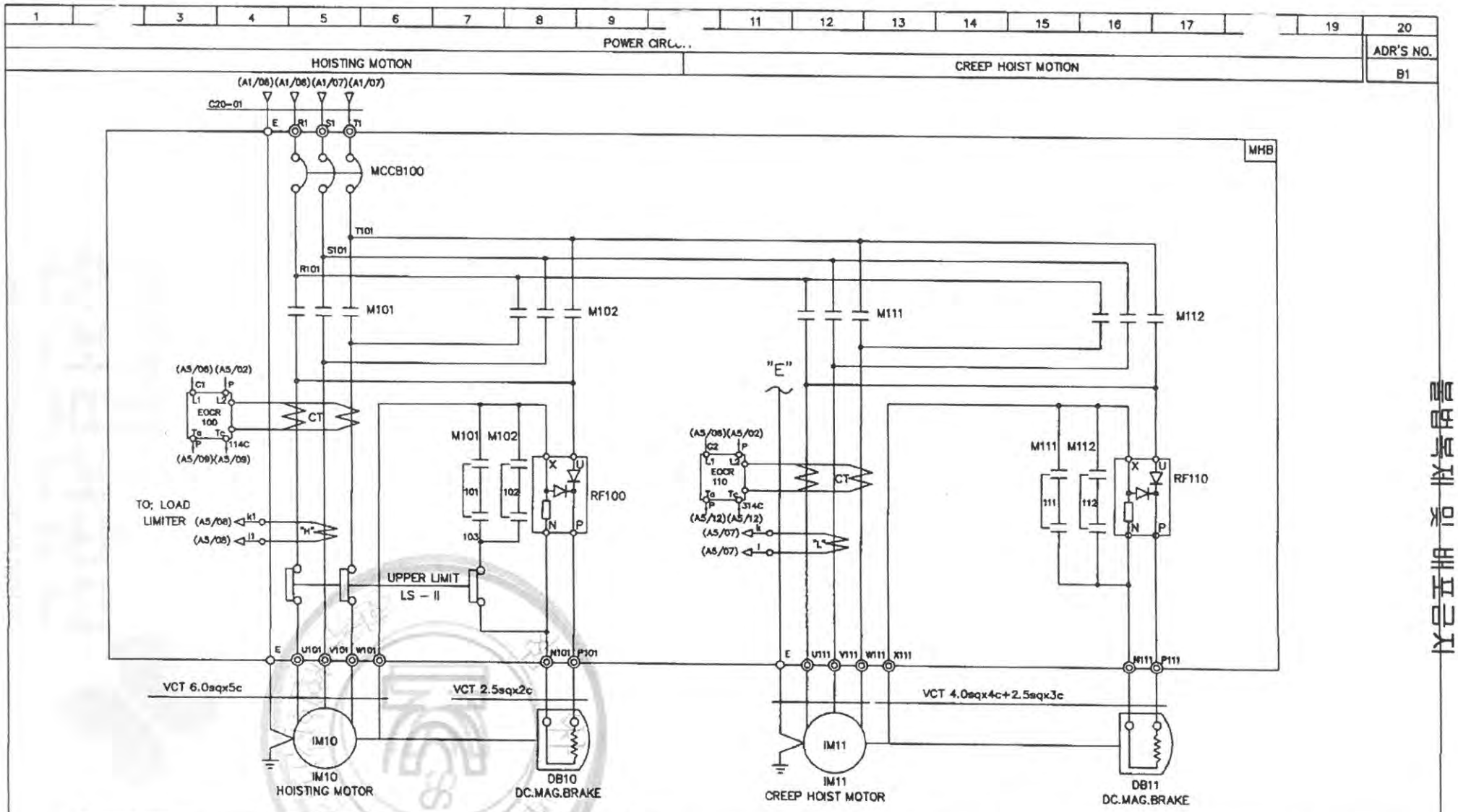


| SPECIFICATION / SYMBOLS | HOISTING POWER | HOISTING MOTOR | CREEP MOTOR | DC.MAG' BRAKE | NO FUSE BREAKER | TRANSFORMER | FUSE | | MAGNET CONTACTOR | | UPPER LIMIT | ELECTRIC OVER CURRENT RELAY | | SILICON RECTIFIER | | LOAD LIMITER | CABLE |
|---|---|---|---|---|---|---|---|---|---|---|---|---|---|---|---|---|---|
| DESCRIPTION | HOIST | IM 10 | IM 11 | DB10, 11 | MCCB100 | TR 1 | F11,F12 | F13 | M101,M102 | M111,M112 | LS–I, LS–II | EOCR100 | EOCR110 | RF100 | RF110 | LOAD LIMITER | C20–01 |
| | 5TON AC 3PH 440V 60Hz | 5.5KW x 6P | 1.0KWx6P | DC 100V | ABE–33AF/30A | 440/110V,120V,100VA | 1A | 3A | DMC48C | DMC22C | AC 600V 75A | SS–30 | SS–05 | SR–60 | SR–30 | JDL–100 | VFCT 6.0sqx4c |
| SELECTION / MAKER | KUKDONG | | | | LS | SHINHAN | – | | DONG–A | | KUKDONG | ASECO | | | | JUNGHO | DONGIL |

| MK | DATE | REVISIONS | CHK. | APP. |
|---|---|---|---|---|
| 4 | | | | |
| 3 | | | | |
| 2 | | | | |
| 1 | | | | |

| CUSTOMER | | DRAWING | DESIGN | CHECKED | APPROVED | SCALE | DATE | ORDER NO. |
|---|---|---|---|---|---|---|---|---|
| DRAWING TITLE | CREEP HOISTING POWER CONTROL CIRCUIT DIAGRAM | | | | | NONE | | |
| | | 국동호이스트 주식회사 KUK DONG HOIST CO., LTD. | | | | DWG. NO | KDC5E42 | |

지우고 배포 금 복제 및 배포금지

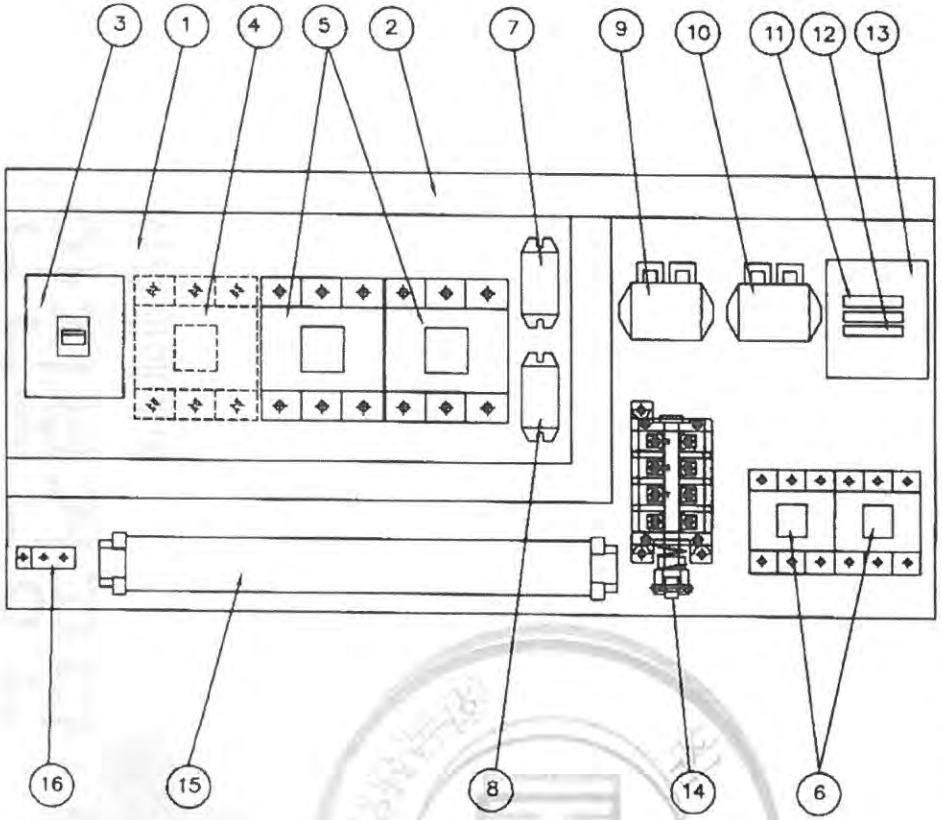


| NO | DESCRIPTION | SPECIFICATION | Q'TY | REMARK |
|---|---|---|---|---|
| 1 | CHASSIS PLATE | | 1 | 아 연 도 금 |
| 2 | CABLE DUCT | – | 1 | |
| 3 | N.F.B | 33AF/30AT | 1 | HOISTING |
| 4 | MAGNET CONTACTOR | DMC32C | 1 | MAIN MAG. |
| 5 | MAGNET CONTACTOR | DMC48C | 2 | HOISTING |
| 6 | MAGNET CONTACTOR | DMC22C | 2 | CREEP HOIST |
| 7 | SILICON RECTIFIER | SR-60 | 1 | HOISTING |
| 8 | SILICON RECTIFIER | SR-30 | 1 | CREEP HOIST |
| 9 | E.O.C.R | SS-30 | 1 | HOISTING |
| 10 | E.O.C.R | SS-05 | 1 | CREEP HOIST |
| 11 | FUSE | 1 A | 2 | |
| 12 | FUSE | 3 A | 1 | |
| 13 | TRANSFORMER | 460V/110V(120V), 100VA | 1 | |
| 14 | UPPER LIMITER | AC 600V, 75A | 1 | LS-1,2 |
| 15 | TERMINAL BLOCK | 60A,15A | | |
| 16 | EARTH TERMINAL | 3tx20x50 | 1 | |

NOTE

1. UPPER LIMIT LS-1,LS-2의 접점 허용 전류 용량. : AC 600V, 75A
2. POWER SOURCE : AC. 3ø 460V 60HZ
3. EARTH TERMINAL RESISTANCE : 0.018Ω

NOTE

1. 전선의 색상은 다음과 같다.
   1) 흑색 : 고류 및 직류 전원선로
   2) 적색 : 고류제어선
   3) 주황색 : 외부 전원에서 공급되는 연동장치 제어회로
   4) 녹색 또는 녹색과 황색 혼용 : 접지선
   5) 청색 : 직류 제어선로
2. CABLE MATERIAL : KIV OR EQUIVALENT / MIN SIZE : 2.5sq
3. 제어용 전선 : 2.5mm KIV,HIV
4. 제작시 다소 변경 될수있음.
5. 외함 개방구조는 다음과 같을것.
   1) 외함 개방시 충전부분이 차단되도록 할것.
   2) 외함 개방후 충전되어있는 부분은 IP2X 이상의 직접 접촉 방호가 되어있을것.

| MK | DATE | REVISIONS | CHK. | APP. |
|---|---|---|---|---|
| 4 | | | | |
| 3 | | | | |
| 2 | | | | |
| 1 | | | | |

| CUSTOMER | | DRAWING | DESIGN | CHECKED | APPROVED | SCALE | DATE | ORDER NO. |
|---|---|---|---|---|---|---|---|---|
| DRAWING TITLE | CREEP HOIST CONTROL BOX | | | | | NONE | | |
| | ARRANGEMENT DRAWING | 극동호이스트 주식회사 KUK DONG HOIST CO., LTD. | | | | DWG. NO | KDC5BA51 | |

ADR'S NO.

시운전 및 배포용

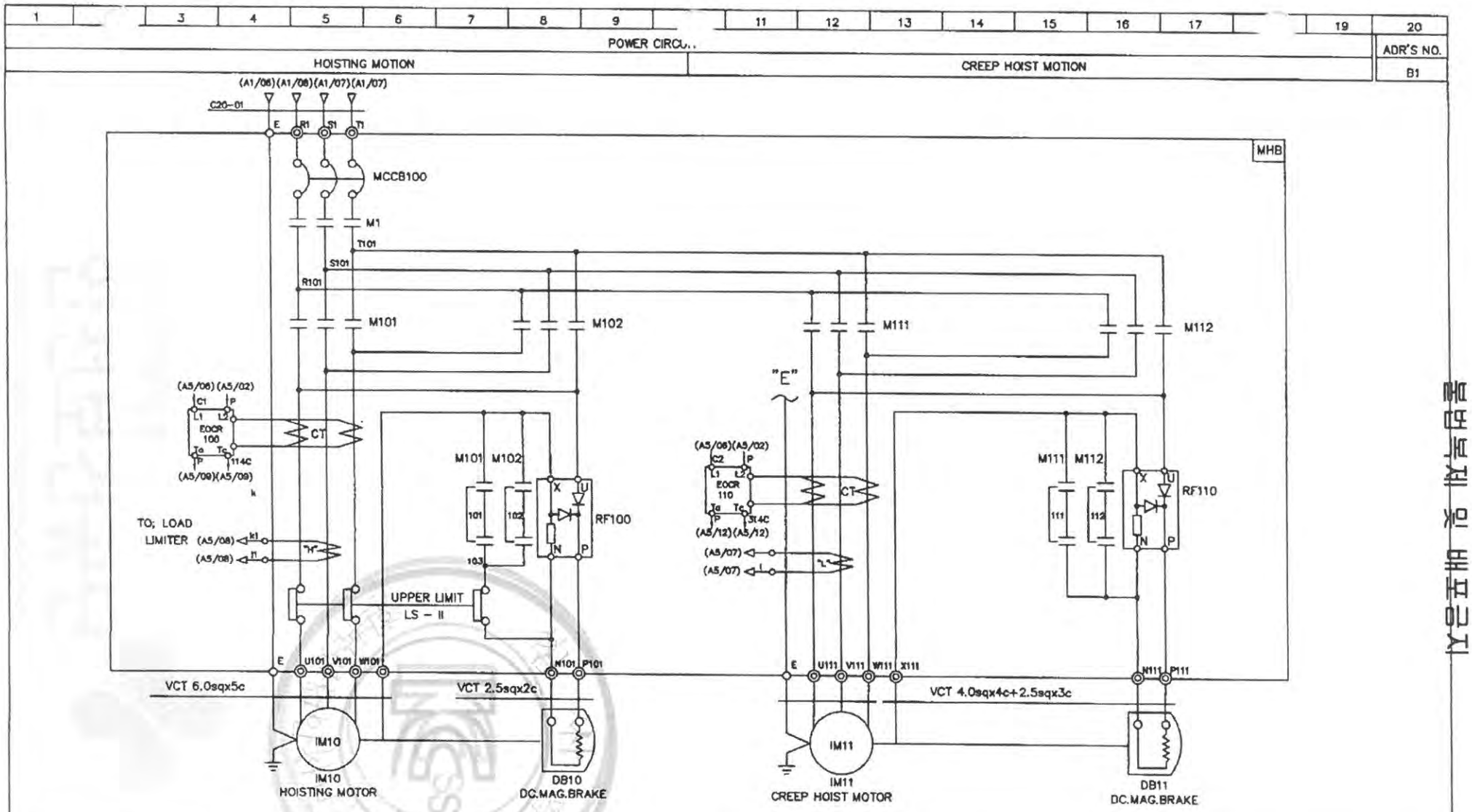


| SPECIFICATION / SYMBOLS | HOISTING POWER | HOISTING MOTOR | CREEP MOTOR | DC.MAG' BRAKE | NO FUSE BREAKER | TRANSFORMER | FUSE | | MAIN MAGNET | MAGNET CONTACTOR | | UPPER LIMIT | ELECTRIC OVER CURRENT RELAY | | SILICON RECTIFIER | | LOAD LIMITER | CABLE |
|---|---|---|---|---|---|---|---|---|---|---|---|---|---|---|---|---|---|---|
| DESCRIPTION | HOIST | IM 10 | IM 11 | DB10, 11 | MCCB100 | TR 1 | F11,F12 | F13 | M1 | M101,M102 | M111,M112 | LS-I, LS-II | EOCR100 | EOCR110 | RF100 | RF110 | LOAD LIMITER | C20-01 |
| | 5TON AC 3PH 460V 60Hz | 5.5KW x 6P | 1.0KWx6P | DC 100V | ABE-33AF/30A | 460/110V,120V,100VA | 1A | 3A | DMC32C | DMC48C | DMC22C | AC 600V 75A | SS-30 | SS-05 | SR-60 | SR-30 | JDL-100 | VFCT 6sqx4c |
| SELECTION / MAKER | KUKDONG | | | | LS | SHINHAN | - | | DONG-A | | | KUKDONG | ASECO | | | | JUNGHO | DONGIL |

| MK | DATE | REVISIONS | CHK. | APP. |
|---|---|---|---|---|
| 4 | | | | |
| 3 | | | | |
| 2 | | | | |
| 1 | | | | |

| CUSTOMER | | DRAWING | DESIGN | CHECKED | APPROVED | SCALE | DATE | ORDER NO. |
|---|---|---|---|---|---|---|---|---|
| DRAWING TITLE | CREEP HOISTING POWER CONTROL CIRCUIT DIAGRAM | | | | | NONE | | |
| | | 극동호이스트 주식회사 KUK DONG HOIST CO., LTD. | | | | DWG. NO | KDC5E51 | |

상표표배 금 제특면출
상표표배 금 제특면출

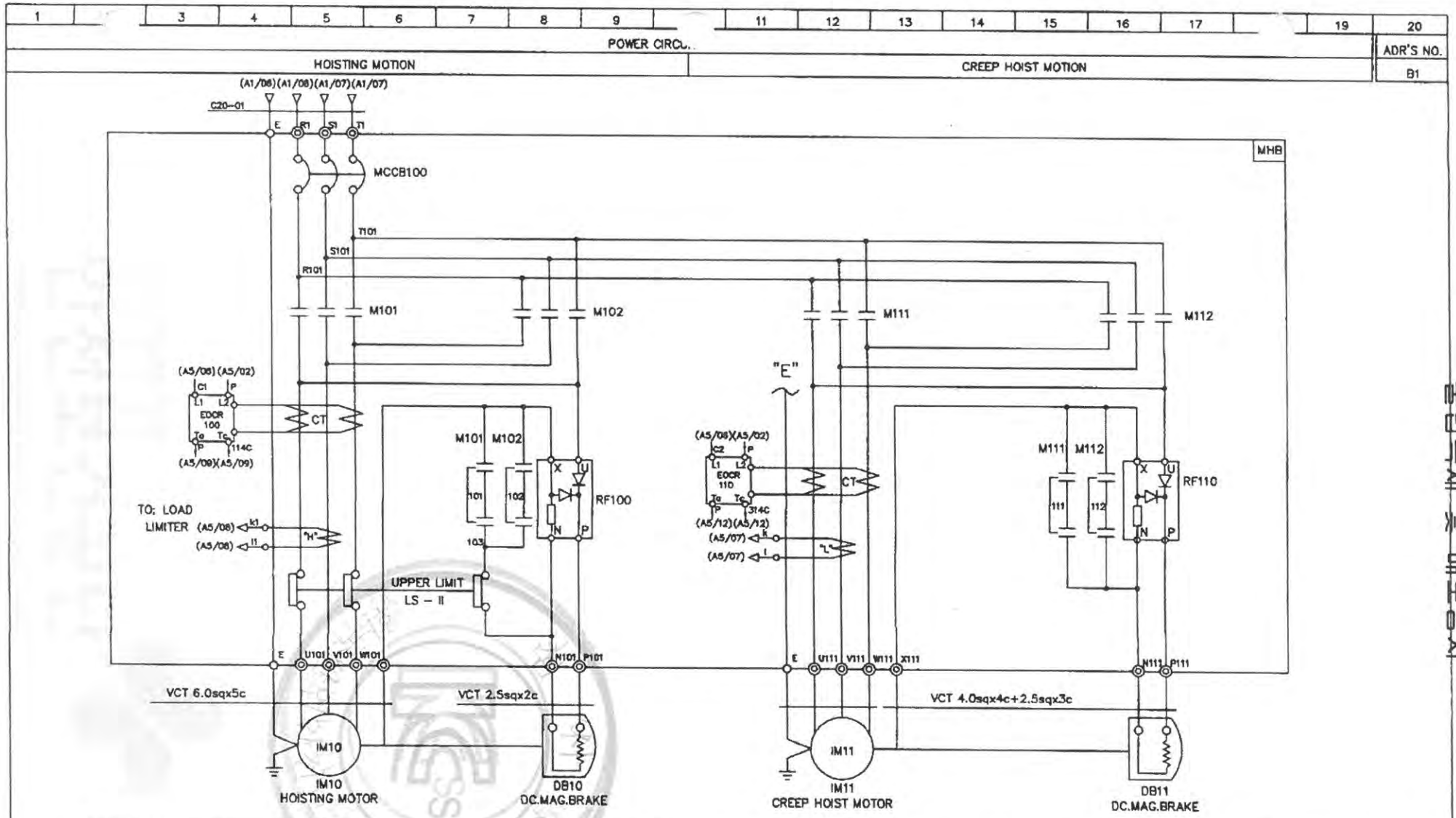


| SPECIFICATION / SYMBOLS | HOISTING POWER | HOISTING MOTOR | CREEP MOTOR | DC.MAG' BRAKE | NO FUSE BREAKER | TRANSFORMER | FUSE | | MAGNET CONTACTOR | | UPPER LIMIT | ELECTRIC OVER CURRENT RELAY | | SILICON RECTIFIER | | LOAD LIMITER | CABLE |
|---|---|---|---|---|---|---|---|---|---|---|---|---|---|---|---|---|---|
| DESCRIPTION | HOIST | IM 10 | IM 11 | DB10, 11 | MCCB100 | TR 1 | F11,F12 | F13 | M101,M102 | M111,M112 | LS-I, LS-II | EOCR100 | EOCR110 | RF100 | RF110 | LOAD LIMITER | C20-01 |
| | 5TON AC 3PH 460V 60Hz | 5.5KW x 6P | 1.0KWx6P | DC 100V | ABE-33AF/30A | 460/110V,120V,100VA | 1A | 3A | DMC48C | DMC22C | AC 600V 75A | SS-30 | SS-05 | SR-60 | SR-30 | JDL-100 | VFCT 6.0sqx4c |
| SELECTION / MAKER | KUKDONG | | | | LS | SHINHAN | - | | DONG-A | | KUKDONG | ASECO | | | | JUNGHO | DONGIL |

| MK | DATE | REVISIONS | CHK. | APP. |
|---|---|---|---|---|
| 4 | | | | |
| 3 | | | | |
| 2 | | | | |
| 1 | | | | |

| CUSTOMER | | DRAWING | DESIGN | CHECKED | APPROVED | SCALE | DATE | ORDER NO. |
|---|---|---|---|---|---|---|---|---|
| DRAWING TITLE | CREEP HOISTING POWER CONTROL CIRCUIT DIAGRAM | | | | | NONE | | |
| | | 국동호이스트 주식회사 KUK DONG HOIST CO., LTD. | | | | DWG. NO | KDC5E52 | |

불법복제 및 배포금지
무단배포 및 배포금지

본 설계도면 및 배포금지
사용포배 및 제공물물

ADR'S NO.

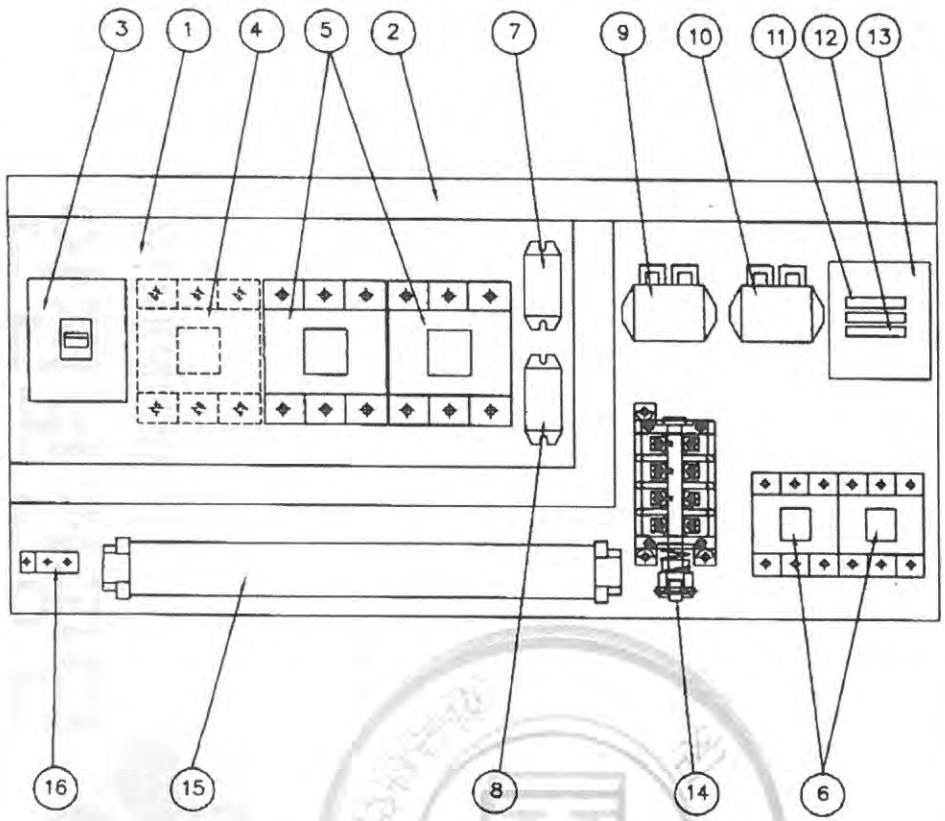


| NO | DESCRIPTION | SPECIFICATION | Q'TY | REMARK |
|---|---|---|---|---|
| 1 | CHASSIS PLATE | | 1 | 아 연 도 금 |
| 2 | CABLE DUCT | – | 1 | |
| 3 | N.F.B | 33AF/30AT | 1 | HOISTING |
| 4 | MAGNET CONTACTOR | DMC32C | 1 | MAIN MAG. |
| 5 | MAGNET CONTACTOR | DMC48C | 2 | HOISTING |
| 6 | MAGNET CONTACTOR | DMC22C | 2 | CREEP HOIST |
| 7 | SILICON RECTIFIER | SR–60 | 1 | HOISTING |
| 8 | SILICON RECTIFIER | SR–30 | 1 | CREEP HOIST |
| 9 | E.O.C.R | SS–30 | 1 | HOISTING |
| 10 | E.O.C.R | SS–05 | 1 | CREEP HOIST |
| 11 | FUSE | 1 A | 2 | |
| 12 | FUSE | 3 A | 1 | |
| 13 | TRANSFORMER | 480V/110V(120V), 100VA | 1 | |
| 14 | UPPER LIMITER | AC 600V, 75A | 1 | LS–1,2 |
| 15 | TERMINAL BLOCK | 60A,15A | | |
| 16 | EARTH TERMINAL | 3tx20x50 | 1 | |

NOTE

1. UPPER LIMIT LS–1,LS–2의 접점 허용 전류 용량. : AC 600V, 75A
2. POWER SOURCE : AC. 3ø 480V 60HZ
3. EARTH TERMINAL RESISTANCE : 0.018Ω

NOTE 1. 전선의 색상은 다음과 같다.

1) 흑색 : 고류 및 직류 전원선로
2) 적색 : 고류제어선
3) 주황색 : 외부 전원에서 공급되는 연동장치 제어회로
4) 녹색 또는 녹색과 황색 혼용 : 접지선
5) 청색 : 직류 제어선로

2. CABLE MATERIAL : KIV OR EQUIVALENT, MIN SIZE : 2.5sq
3. 제어용 전선 : 2.5mm KIV,HIV
4. 제작시 다소 변경 될수있음.
5. 외함 개방구조는 다음과 같을것.
   1) 외함 개방시 충전부분이 차단되도록 할것.
   2) 외함 개방후 충전되어있는 부분은 IP2X 이상의 직접 접촉 방호가 되어있을것.

| MK | DATE | REVISIONS | CHK. | APP. |
|---|---|---|---|---|
| 4 | | | | |
| 3 | | | | |
| 2 | | | | |
| 1 | | | | |

| CUSTOMER | | DRAWING | DESIGN | CHECKED | APPROVED | SCALE | DATE | ORDER NO. |
|---|---|---|---|---|---|---|---|---|
| DRAWING TITLE | CREEP HOIST CONTROL BOX | | | | | NONE | | |
| | ARRANGEMENT DRAWING | 극동호이스트 주식회사 KUK DONG HOIST CO., LTD. | | | | DWG. NO | KDC58A61 | |

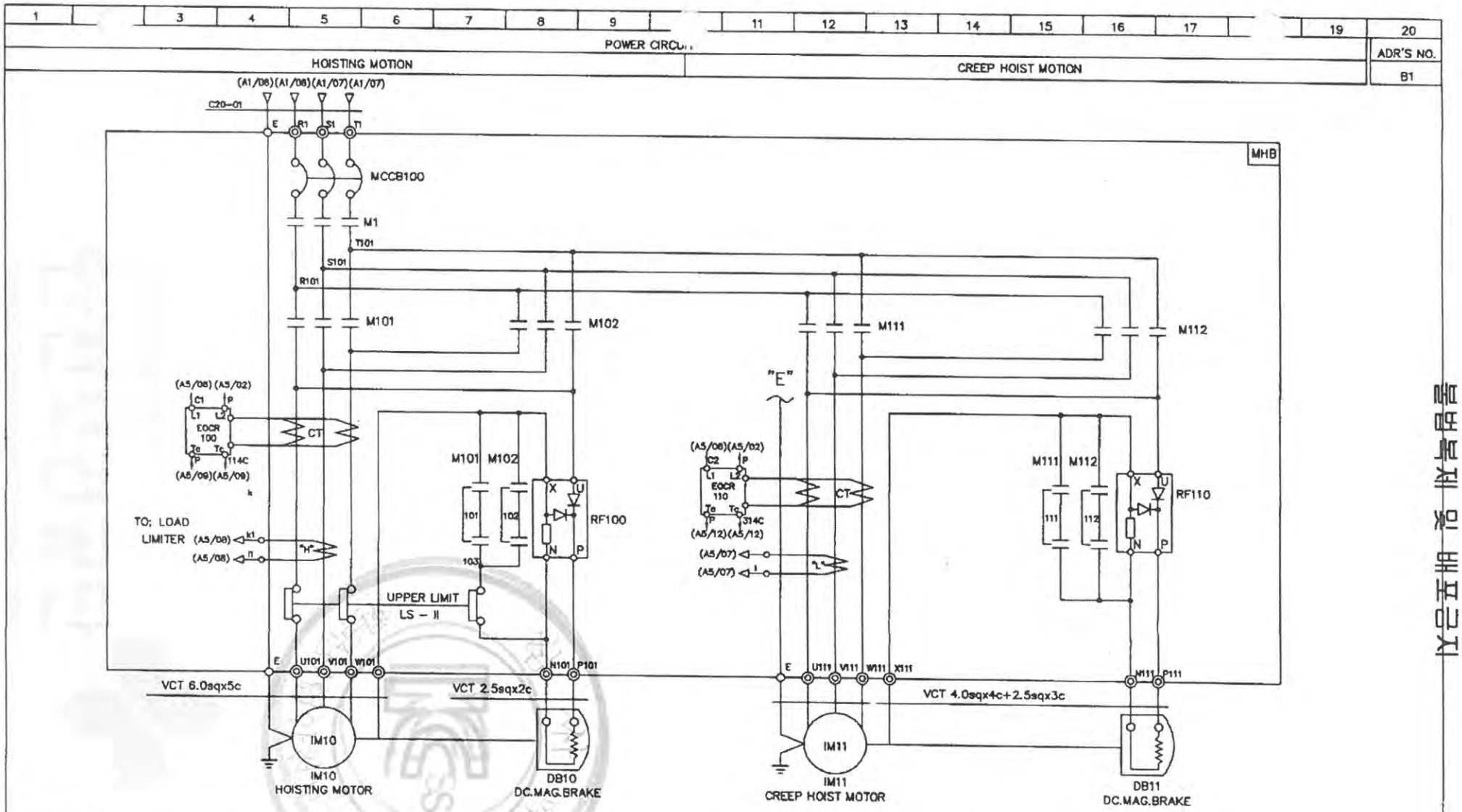


| SPECIFICATION / SYMBOLS / DESCRIPTION | HOISTING POWER | HOISTING MOTOR | CREEP MOTOR | DC.MAG BRAKE | NO FUSE BREAKER | TRANSFORMER | FUSE | | MAIN MAGNET | MAGNET CONTACTOR | | UPPER LIMIT | ELECTRIC OVER CURRENT RELAY | | SILICON RECTIFIER | | LOAD LIMITER | CABLE |
|---|---|---|---|---|---|---|---|---|---|---|---|---|---|---|---|---|---|---|
| | HOIST | IM 10 | IM 11 | DB10, 11 | MCCB100 | TR 1 | F11,F12 | F13 | M1 | M101,M102 | M111,M112 | LS-I, LS-II | EOCR100 | EOCR110 | RF100 | RF110 | LOAD LIMITER | C20-01 |
| | 5TON AC 3PH 480V 60Hz | 5.5KW x 6P | 1.0KWx6P | DC 100V | ABE-33AF/30A | 480/110V,120V,100VA | 1A | 3A | DMC32C | DMC48C | DMC22C | AC 600V 75A | SS-30 | SS-05 | SR-60 | SR-30 | JDL-100 | VFCT 6sqx4c |
| SELECTION / MAKER | KUKDONG | | | | LS | SHINHAN | - | | DONG-A | | | KUKDONG | ASECO | | | | JUNGHO | DONGIL |

| MK | DATE | REVISIONS | CHK. | APP. |
|---|---|---|---|---|
| 4 | | | | |
| 3 | | | | |
| 2 | | | | |
| 1 | | | | |

| CUSTOMER | | DRAWING | DESIGN | CHECKED | APPROVED | SCALE | DATE | ORDER NO. |
|---|---|---|---|---|---|---|---|---|
| DRAWING TITLE | CREEP HOISTING POWER CONTROL CIRCUIT DIAGRAM | | | | | NONE | | |
| | | KD 국동호이스트 주식회사 KUK DONG HOIST CO., LTD. | | | | DWG. NO | KDC5E61 | |

자료표배 금 배포금지

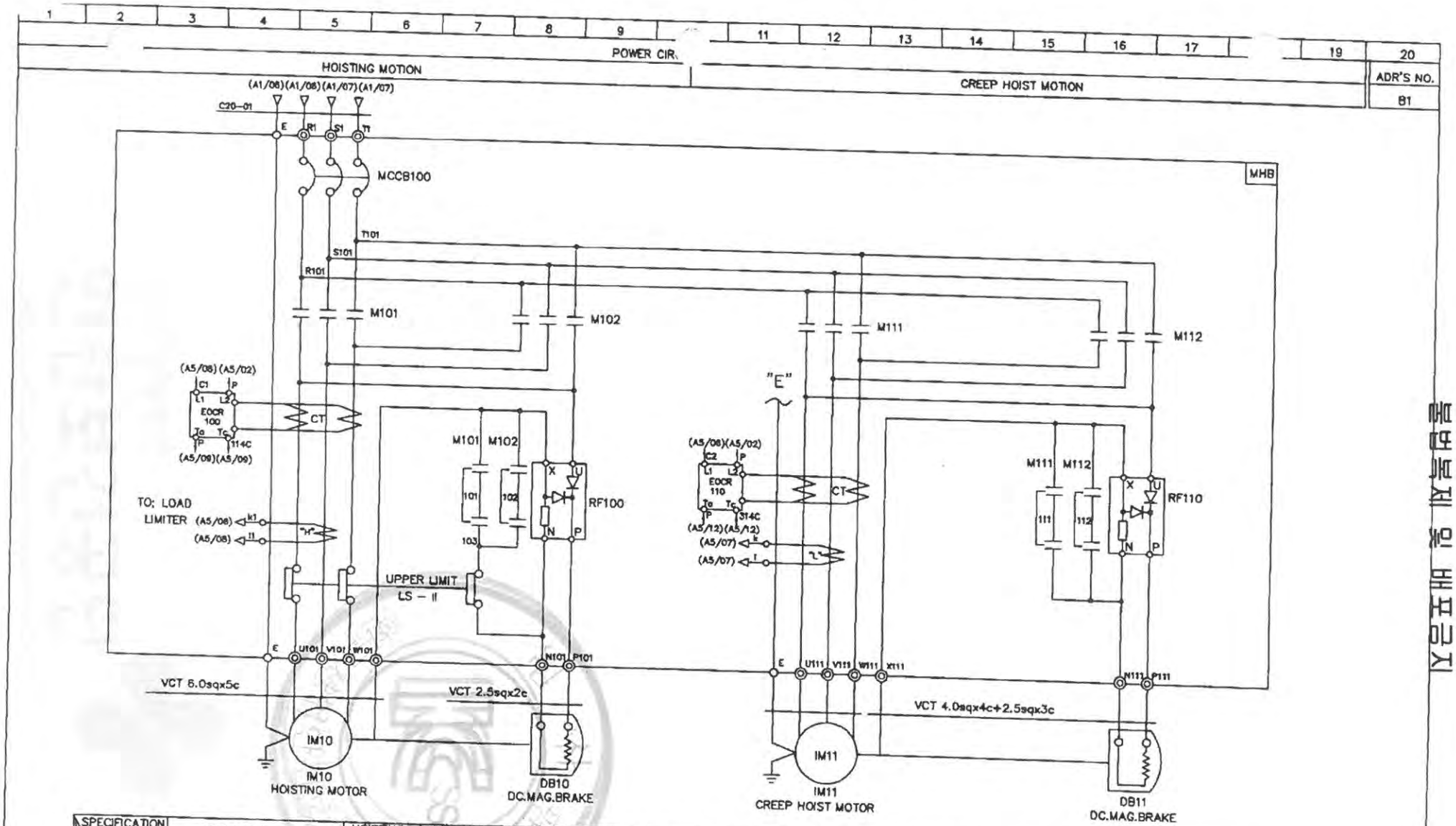


| SPECIFICATION / SYMBOLS | HOISTING POWER | HOISTING MOTOR | CREEP MOTOR | DC.MAG BRAKE | NO FUSE BREAKER | TRANSFORMER | FUSE | | MAGNET CONTACTOR | | UPPER LIMIT | ELECTRIC OVER CURRENT RELAY | | SILICON RECTIFIER | | LOAD LIMITER | CABLE |
|---|---|---|---|---|---|---|---|---|---|---|---|---|---|---|---|---|---|
| DESCRIPTION | HOIST | IM 10 | IM 11 | DB10, 11 | MCCB100 | TR 1 | F11,F12 | F13 | M101,M102 | M111,M112 | LS-I, LS-II | EOCR100 | EOCR110 | RF100 | RF110 | LOAD LIMITER | C20-01 |
| | 5TON AC 3PH 480V 60Hz | 5.5KW x 6P | 1.0KWx6P | DC 100V | ABE-33AF/30A | 480/110V,120V,100VA | 1A | 3A | DMC48C | DMC22C | AC 600V 75A | SS-30 | SS-05 | SR-60 | SR-30 | JDL-100 | VFCT 6.0sqx4c |
| SELECTION / MAKER | KUKDONG | | | | LS | SHINHAN | - | | DONG-A | | KUKDONG | ASECO | | | | JEUNGHO | DONGIL |

| MK | DATE | REVISIONS | CHK. | APP. |
|---|---|---|---|---|
| 4 | | | | |
| 3 | | | | |
| 2 | | | | |
| 1 | | | | |

| CUSTOMER | | DRAWING | DESIGN | CHECKED | APPROVED | SCALE | DATE | ORDER NO. |
|---|---|---|---|---|---|---|---|---|
| DRAWING TITLE | CREEP HOISTING POWER CONTROL CIRCUIT DIAGRAM | | | | | NONE | | |
| | | 국동호이스트 주식회사 KUK DONG HOIST CO., LTD. | | | | DWG. NO | KDC5E62 | |

불법복제 및 배포금지
사용표배 및 배포금지

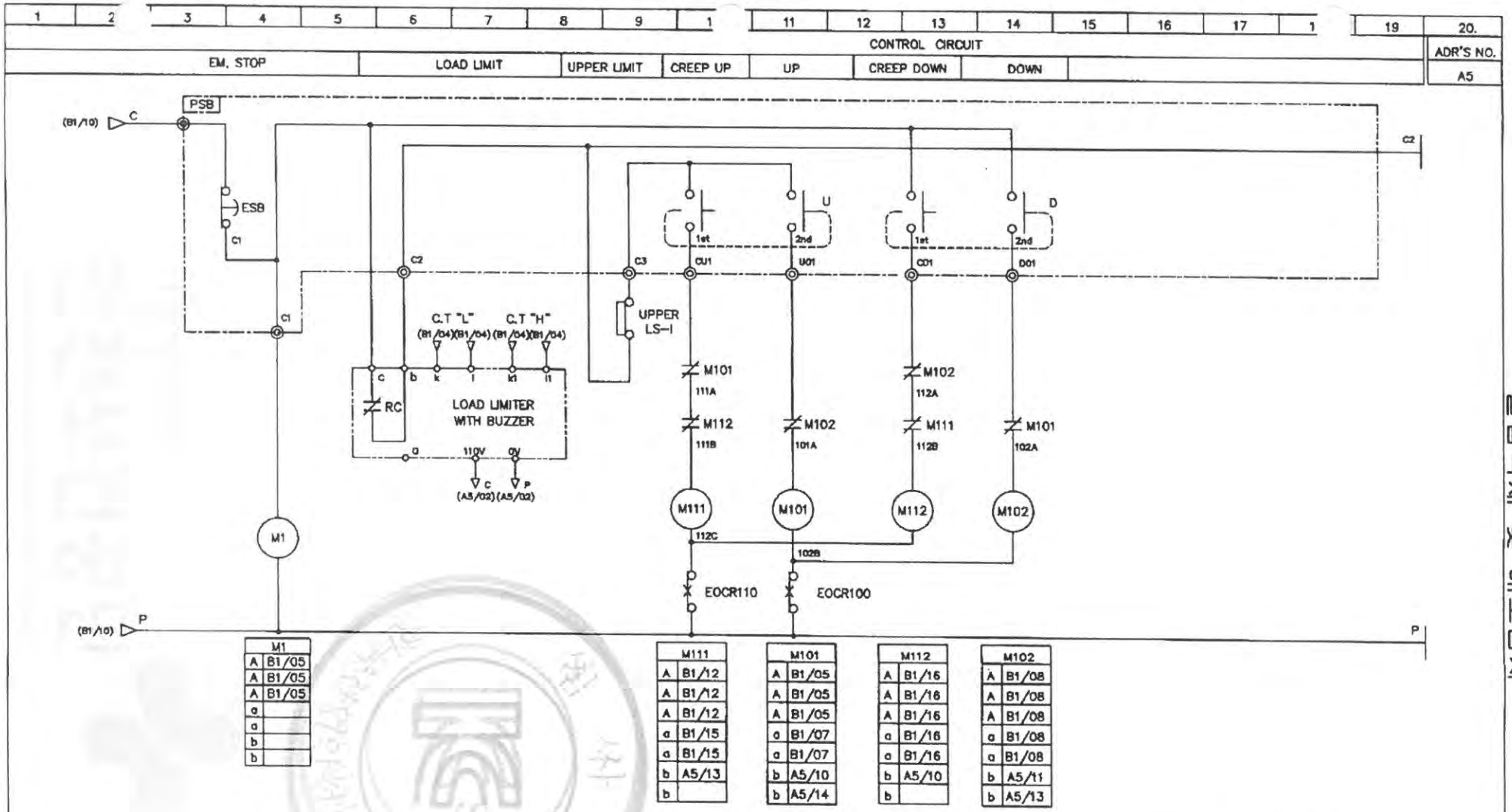


| SPECIFICATION / SYMBOLS / DESCRIPTION | UPPER LIMIT | PENDANT P.B S/W | LOAD LIMITER |
|---|---|---|---|
| | LS-1 | E.S.B | LOAD LIMITER |
| | AC 600V 75A | 250V 3A | JDL-100 |
| | AC 600V 3A | 250V 3A | JDL-100 |
| MAKER | KUKDONG | KGAUTO | JUNGHO |

| MK | DATE | REVISIONS | CHK. | APP. |
|---|---|---|---|---|
| 4 | | | | |
| 3 | | | | |
| 2 | | | | |
| 1 | | | | |

| CUSTOMER | | DRAWING | DESIGN | CHECKED | APPROVED | SCALE | DATE | ORDER NO. |
|---|---|---|---|---|---|---|---|---|
| DRAWING TITLE | MAIN POWER 2 & CONTROL CIRCUIT DIAGRAM | | | | | NONE | | |
| | | 국동호이스트 주식회사 KUK DONG HOIST CO., LTD. | | | | DWG. NO | KDC3E001 | |

불법복제 및 배포금지
기밀표제 및 배포금지

■ PUSH BUTTON SWITCH (KG-H02EA)

KD

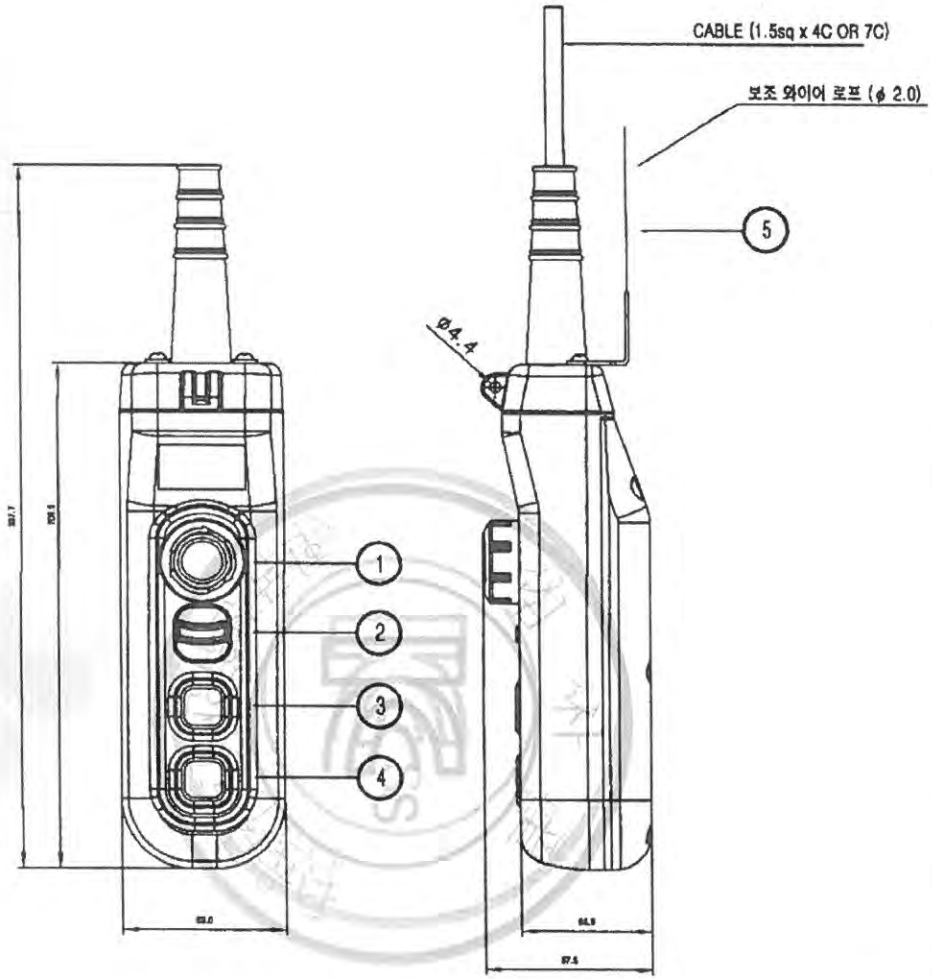


| NO | SYMBOL | TYPE | SPEC. | COLOR |
|---|---|---|---|---|
| 1 | E.B.S | PUSH LOCK TURN RESET TYPE | 250VAC x 6A | RED |
| 2 | SPARE | | | BLACK |
| 3 | UP | PUSH BUTTON 2STEP | | |
| 4 | DOWN | PUSH BUTTON 2STEP | | |
| 5 | 보조 WIRE | ϕ 2.0 | | |

* MATERIAL : POLYCARBOBATE(PLASTIC)
* BODY COLOR : YELLOW, BLACK
* IP : 55 이상

| 색상 \ 구분 | 조작버튼 | 표시등 |
|---|---|---|
| 적색 | 비상 | 비상 |
| 황색 | 비정상 | 비정상 |
| 녹색 | 정상 | 정상 |
| 청색 | 의무 | 의무 |
| 흰색,회색-흑색 | 지정된의미없음 | 기타 |

| NO | DESCRIPTION | MATERIAL | Q'TY | SIZE | UNIT WEIGHT(Kg) | TOTAL WEIGHT(Kg) | REMARK |
|---|---|---|---|---|---|---|---|

| | | | | | | |
|---|---|---|---|---|---|---|
| Scale | N/S | DWG. | CHK. | APP. | Title | PUSH BUTTON SWITCH |
| Pro-jection | 3ANGLES | K.M.Seo | | M.H.Kim | | & EMERGENCY BUTTON SWITCH |
| Mass | Kg | | | | | KG-H02EA |
| KD KUK DONG HOIST CO., LTD. | | | | | DWG No. | |

사용금지 및 배포금지
불법복제 및 배포금지

불법복제 및 배포금지
불법복제 및 배포금지

# THREE PHASE INDUCTION MOTOR DATE SHEET

SCHEDULE OF TECHNICAL DATA

| | |
|---|---|
| 1. SERVICE | HOISTING |
| 2. MANUFACTURE | 극동호이스트 (주) |
| 3. FRAME NUMBER | 132 M |
| 4. RATED POWER | 5.5 KW x 6 P |
| 5. RATED VOLTAGE AND FREQUENCY | 220 V 60 Hz |
| 6. MOTOR TYPE | SQUIRREL CAGE ROTOR TYPE |
| 7. SERVICE FACTOR AND RATTING | 1 . 0 , 30 MIN |
| 8. LOCATION AND INSULATION CLASS | INDOOR, OUTDOOR, B CLASS |
| 9. DESIGN TRMPERATURE RISE(BY RESISTANCE) | 80 ℃ |
| 10. FULL LOAD SPEED | 1160 RPM |
| 11. FULL LOAD CURRENT | 28.2 A |
| 12. LOCKED ROTOR CURRENT | 155.1 A |
| 13. MINIMUM STARTING VOLTAGE | 200 V |
| 14. EFFICIENCY AT 100% RATED LOAD | 77 % |
| 15. POWER FACTOR AT 100% RATED LOAD | 66.4 % |
| 16. FULL LOAD TORQUE | 11.59 KG.M |
| 17. SITE ALTTITUDE(UNDER) | 1000 M |
| 18. ENCLOSURE & COOLING METHOD | T E N V |
| 19. TYPE OF BEARING | PL : 6307zz OPL : 6207zz |
| 20. MOUNTING | H O R I Z O N T A L |
| 21. MAXIMUM AMBIENT TEMPURE | 40 ℃ |
| 22. BEARING LUBRICATION | G R E A S E |
| 23. STARTING METHOD | F U L L V O L T A G E |

불법복제 및 배포금지
불법복제 및 배포금지

# THREE PHASE INDUCTION MOTOR DATE SHEET

SCHEDULE OF TECHNICAL DATA

| | |
|---|---|
| 1. SERVICE | HOISTING |
| 2. MANUFACTURE | 극동호이스트 (주) |
| 3. FRAME NUMBER | 132 M |
| 4. RATED POWER | 5.5 KW x 6 P |
| 5. RATED VOLTAGE AND FREQUENCY | 380 V 60 Hz |
| 6. MOTOR TYPE | SQUIRREL CAGE ROTOR TYPE |
| 7. SERVICE FACTOR AND RATTING | 1 . 0 , 30 MIN |
| 8. LOCATION AND INSULATION CLASS | INDOOR, OUTDOOR, B CLASS |
| 9. DESIGN TRMPERATURE RISE(BY RESISTANCE) | 80 ℃ |
| 10. FULL LOAD SPEED | 1160 RPM |
| 11. FULL LOAD CURRENT | 16.3 A |
| 12. LOCKER ROTOR CURRENT | 89.8 A |
| 13. MINIMUM STARTING VOLTAGE | 342 V |
| 14. EFFICIENCY AT 100% RATED LOAD | 77 % |
| 15. POWER FACTOR AT 100% RATED LOAD | 66.4 % |
| 16. FULL LOAD TORQUE | 11.59 KG.M |
| 17. SITE ALTTITUDE(UNDER) | 1000 M |
| 18. ENCLOSURE & COOLING METHOD | T E N V |
| 19. TYPE OF BEARING | PL : 6307zz OPL : 6207zz |
| 20. MOUNTING | H O R I Z O N T A L |
| 21. MAXIMUM AMBIENT TEMPURE | 40 ℃ |
| 22. BEARING LUBRICATION | G R E A S E |
| 23. STARTING METHOD | F U L L V O L T A G E |

불법복제 및 배포금지
불법복제 및 배포금지

# THREE PHASE INDUCTION MOTOR DATE SHEET

SCHEDULE OF TECHNICAL DATA

| | |
|---|---|
| 1. SERVICE | HOISTING |
| 2. MANUFACTURE | 극동호이스트 (주) |
| 3. FRAME NUMBER | 132 M |
| 4. RATED POWER | 5.5 KW x 6 P |
| 5. RATED VOLTAGE AND FREQUENCY | 440 V 60 Hz |
| 6. MOTOR TYPE | SQUIRREL CAGE ROTOR TYPE |
| 7. SERVICE FACTOR AND RATTING | 1 . 0 , 30 MIN |
| 8. LOCATION AND INSULATION CLASS | INDOOR, OUTDOOR, B CLASS |
| 9. DESIGN TRMPERATURE RISE(BY RESISTANCE) | 80 ℃ |
| 10. FULL LOAD SPEED | 1160 RPM |
| 11. FULL LOAD CURRENT | 14.1 A |
| 12. LOCKED ROTOR CURRENT | 77.6 A |
| 13. MINIMUM STARTING VOLTAGE | 400 V |
| 14. EFFICIENCY AT 100% RATED LOAD | 77 % |
| 15. POWER FACTOR AT 100% RATED LOAD | 66.4 % |
| 16. FULL LOAD TORQUE | 11.59 KG.M |
| 17. SITE ALTTITUDE(UNDER) | 1000 M |
| 18. ENCLOSURE & COOLING METHOD | T E N V |
| 19. TYPE OF BEARING | PL : 6307zz OPL : 6207zz |
| 20. MOUNTING | H O R I Z O N T A L |
| 21. MAXIMUM AMBIENT TEMPURE | 40 ℃ |
| 22. BEARING LUBRICATION | G R E A S E |
| 23. STARTING METHOD | F U L L V O L T A G E |

불법복제 및 배포금지
불법복제 및 배포금지

# THREE PHASE INDUCTION MOTOR DATE SHEET

SCHEDULE OF TECHNICAL DATA

| | |
|---|---|
| 1. SERVICE | HOISTING |
| 2. MANUFACTURE | 극동호이스트 (주) |
| 3. FRAME NUMBER | 132 L |
| 4. RATED POWER | 5.5 KW x 6 P |
| 5. RATED VOLTAGE AND FREQUENCY | 460 V 60 Hz |
| 6. MOTOR TYPE | SQUIRREL CAGE ROTOR TYPE |
| 7. SERVICE FACTOR AND RATTING | 1 . 0 , 30 MIN |
| 8. LOCATION AND INSULATION CLASS | INDOOR, OUTDOOR, B CLASS |
| 9. DESIGN TRMPERATURE RISE(BY RESISTANCE) | 80 ℃ |
| 10. FULL LOAD SPEED | 1160 RPM |
| 11. FULL LOAD CURRENT | 13.5 A |
| 12. LOCKED ROTOR CURRENT | 74.3 A |
| 13. MINIMUM STARTING VOLTAGE | 418 V |
| 14. EFFICIENCY AT 100% RATED LOAD | 77 % |
| 15. POWER FACTOR AT 100% RATED LOAD | 66.4 % |
| 16. FULL LOAD TORQUE | 11.59 KG.M |
| 17. SITE ALTTITUDE(UNDER) | 1000 M |
| 18. ENCLOSURE & COOLING METHOD | T E N V |
| 19. TYPE OF BEARING | PL : 6307zz OPL : 6207zz |
| 20. MOUNTING | H O R I Z O N T A L |
| 21. MAXIMUM AMBIENT TEMPURE | 40 ℃ |
| 22. BEARING LUBRICATION | G R E A S E |
| 23. STARTING METHOD | F U L L V O L T A G E |

불법복제 및 배포금지
불법복제 및 배포금지

# THREE PHASE INDUCTION MOTOR DATE SHEET

SCHEDULE OF TECHNICAL DATA

| | |
|---|---|
| 1. SERVICE | HOISTING |
| 2. MANUFACTURE | 극동호이스트 (주) |
| 3. FRAME NUMBER | 132 M |
| 4. RATED POWER | 5.5 KW x 6 P |
| 5. RATED VOLTAGE AND FREQUENCY | 480 V 60 Hz |
| 6. MOTOR TYPE | SQUIRREL CAGE ROTOR TYPE |
| 7. SERVICE FACTOR AND RATTING | 1 . 0 , 30 MIN |
| 8. LOCATION AND INSULATION CLASS | INDOOR, OUTDOOR, B CLASS |
| 9. DESIGN TRMPERATURE RISE(BY RESISTANCE) | 80 ℃ |
| 10. FULL LOAD SPEED | 1160 RPM |
| 11. FULL LOAD CURRENT | 12.9 A |
| 12. LOCKED ROTOR CURRENT | 71.2 A |
| 13. MINIMUM STARTING VOLTAGE | 436 V |
| 14. EFFICIENCY AT 100% RATED LOAD | 77 % |
| 15. POWER FACTOR AT 100% RATED LOAD | 66.4 % |
| 16. FULL LOAD TORQUE | 11.59 KG.M |
| 17. SITE ALTTITUDE(UNDER) | 1000 M |
| 18. ENCLOSURE & COOLING METHOD | T E N V |
| 19. TYPE OF BEARING | PL : 6307zz OPL : 6207zz |
| 20. MOUNTING | H O R I Z O N T A L |
| 21. MAXIMUM AMBIENT TEMPURE | 40 ℃ |
| 22. BEARING LUBRICATION | G R E A S E |
| 23. STARTING METHOD | F U L L V O L T A G E |

불법복제 및 배포금지
불법복제 및 배포금지

# THREE PHASE INDUCTION MOTOR DATE SHEET

SCHEDULE OF TECHNICAL DATA

| | |
|---|---|
| 1. SERVICE | HOISTING |
| 2. MANUFACTURE | 극동호이스트 (주) |
| 3. FRAME NUMBER | 132 M |
| 4. RATED POWER | 4.2 KW x 8 P |
| 5. RATED VOLTAGE AND FREQUENCY | 220 V 60 Hz |
| 6. MOTOR TYPE | SQUIRREL CAGE ROTOR TYPE |
| 7. SERVICE FACTOR AND RATTING | 1 . 0 , 30 MIN |
| 8. LOCATION AND INSULATION CLASS | INDOOR, OUTDOOR, B CLASS |
| 9. DESIGN TRMPERATURE RISE(BY RESISTANCE) | 80 ℃ |
| 10. FULL LOAD SPEED | 860 RPM |
| 11. FULL LOAD CURRENT | 23.0 A |
| 12. LOCKED ROTOR CURRENT | 136.2 A |
| 13. MINIMUM STARTING VOLTAGE | 200 V |
| 14. EFFICIENCY AT 100% RATED LOAD | 77.5 % |
| 15. POWER FACTOR AT 100% RATED LOAD | 60 % |
| 16. FULL LOAD TORQUE | 14.93 KG.M |
| 17. SITE ALTTITUDE(UNDER) | 1000 M |
| 18. ENCLOSURE & COOLING METHOD | T E N V |
| 19. TYPE OF BEARING | PL : 6307zz OPL : 6207zz |
| 20. MOUNTING | H O R I Z O N T A L |
| 21. MAXIMUM AMBIENT TEMPURE | 40 ℃ |
| 22. BEARING LUBRICATION | G R E A S E |
| 23. STARTING METHOD | F U L L V O L T A G E |

불법복제 및 배포금지
불법복제 및 배포금지

# THREE PHASE INDUCTION MOTOR DATE SHEET

SCHEDULE OF TECHNICAL DATA

| | |
|---|---|
| 1. SERVICE | HOISTING |
| 2. MANUFACTURE | 극동호이스트 (주) |
| 3. FRAME NUMBER | 132 M |
| 4. RATED POWER | 4.2 KW x 8 P |
| 5. RATED VOLTAGE AND FREQUENCY | 380 V 60 Hz |
| 6. MOTOR TYPE | SQUIRREL CAGE ROTOR TYPE |
| 7. SERVICE FACTOR AND RATTING | 1 . 0 , 30 MIN |
| 8. LOCATION AND INSULATION CLASS | INDOOR, OUTDOOR, B CLASS |
| 9. DESIGN TRMPERATURE RISE(BY RESISTANCE) | 80 ℃ |
| 10. FULL LOAD SPEED | 860 RPM |
| 11. FULL LOAD CURRENT | 13.3 A |
| 12. LOCKED ROTOR CURRENT | 78.8 A |
| 13. MINIMUM STARTING VOLTAGE | 342 V |
| 14. EFFICIENCY AT 100% RATED LOAD | 77.5 % |
| 15. POWER FACTOR AT 100% RATED LOAD | 60 % |
| 16. FULL ROTOR TORQUE | 14.93 KG.M |
| 17. SITE ALTTITUDE(UNDER) | 1000 M |
| 18. ENCLOSURE & COOLING METHOD | T E N V |
| 19. TYPE OF BEARING | PL : 6307zz OPL : 6207zz |
| 20. MOUNTING | H O R I Z O N T A L |
| 21. MAXIMUM AMBIENT TEMPURE | 40 ℃ |
| 22. BEARING LUBRICATION | G R E A S E |
| 23. STARTING METHOD | F U L L V O L T A G E |

불법복제 및 배포금지
불법복제 및 배포금지

# THREE PHASE INDUCTION MOTOR DATE SHEET

SCHEDULE OF TECHNICAL DATA

| | |
|---|---|
| 1. SERVICE | HOISTING |
| 2. MANUFACTURE | 극동호이스트 (주) |
| 3. FRAME NUMBER | 132 M |
| 4. RATED POWER | 4.2 KW x 8 P |
| 5. RATED VOLTAGE AND FREQUENCY | 440 V 60 Hz |
| 6. MOTOR TYPE | SQUIRREL CAGE ROTOR TYPE |
| 7. SERVICE FACTOR AND RATTING | 1 . 0 , 30 MIN |
| 8. LOCATION AND INSULATION CLASS | INDOOR, OUTDOOR, B CLASS |
| 9. DESIGN TRMPERATURE RISE(BY RESISTANCE) | 80 ℃ |
| 10. FULL LOAD SPEED | 860 RPM |
| 11. FULL LOAD CURRENT | 11.5 A |
| 12. LOCKED ROTOR CURRENT | 68.1 A |
| 13. MINIMUM STARTING VOLTAGE | 400 V |
| 14. EFFICIENCY AT 100% RATED LOAD | 77.5 % |
| 15. POWER FACTOR AT 100% RATED LOAD | 60 % |
| 16. FULL LOAD TORQUE | 14.93 KG.M |
| 17. SITE ALTTITUDE(UNDER) | 1000 M |
| 18. ENCLOSURE & COOLING METHOD | T E N V |
| 19. TYPE OF BEARING | PL : 6307zz OPL : 6207zz |
| 20. MOUNTING | H O R I Z O N T A L |
| 21. MAXIMUM AMBIENT TEMPURE | 40 ℃ |
| 22. BEARING LUBRICATION | G R E A S E |
| 23. STARTING METHOD | F U L L V O L T A G E |

불법복제 및 배포금지
불법복제 및 배포금지

# THREE PHASE INDUCTION MOTOR DATE SHEET

SCHEDULE OF TECHNICAL DATA

| | |
|---|---|
| 1. SERVICE | HOISTING |
| 2. MANUFACTURE | 극동호이스트 (주) |
| 3. FRAME NUMBER | 132 M |
| 4. RATED POWER | 4.2 KW x 8 P |
| 5. RATED VOLTAGE AND FREQUENCY | 460 V 60 Hz |
| 6. MOTOR TYPE | SQUIRREL CAGE ROTOR TYPE |
| 7. SERVICE FACTOR AND RATTING | 1 . 0 , 30 MIN |
| 8. LOCATION AND INSULATION CLASS | INDOOR, OUTDOOR, B CLASS |
| 9. DESIGN TRMPERATURE RISE(BY RESISTANCE) | 80 ℃ |
| 10. FULL LOAD SPEED | 860 RPM |
| 11. FULL LOAD CURRENT | 11.0 A |
| 12. LOCKED ROTOR CURRENT | 65.1 A |
| 13. MINIMUM STARTING VOLTAGE | 418 V |
| 14. EFFICIENCY AT 100% RATED LOAD | 77.5 % |
| 15. POWER FACTOR AT 100% RATED LOAD | 60 % |
| 16. FULL LOAD TORQUE | 14.93 KG.M |
| 17. SITE ALTTITUDE(UNDER) | 1000 M |
| 18. ENCLOSURE & COOLING METHOD | T E N V |
| 19. TYPE OF BEARING | PL : 6307zz OPL : 6207zz |
| 20. MOUNTING | H O R I Z O N T A L |
| 21. MAXIMUM AMBIENT TEMPURE | 40 ℃ |
| 22. BEARING LUBRICATION | G R E A S E |
| 23. STARTING METHOD | F U L L V O L T A G E |

불법복제 및 배포금지
불법복제 및 배포금지

# THREE PHASE INDUCTION MOTOR DATE SHEET

SCHEDULE OF TECHNICAL DATA

| | |
|---|---|
| 1. SERVICE | HOISTING |
| 2. MANUFACTURE | 극동호이스트 (주) |
| 3. FRAME NUMBER | 132 M |
| 4. RATED POWER | 4.2 KW x 8 P |
| 5. RATED VOLTAGE AND FREQUENCY | 480 V 60 Hz |
| 6. MOTOR TYPE | SQUIRREL CAGE ROTOR TYPE |
| 7. SERVICE FACTOR AND RATTING | 1 . 0 , 30 MIN |
| 8. LOCATION AND INSULATION CLASS | INDOOR, OUTDOOR, B CLASS |
| 9. DESIGN TRMPERATURE RISE(BY RESISTANCE) | 80 ℃ |
| 10. FULL LOAD SPEED | 860 RPM |
| 11. FULL LOAD CURRENT | 10.5 A |
| 12. LOCKED ROTOR CURRENT | 62.4 A |
| 13. MINIMUM STARTING VOLTAGE | 436 V |
| 14. EFFICIENCY AT 100% RATED LOAD | 77.5 % |
| 15. POWER FACTOR AT 100% RATED LOAD | 60 % |
| 16. FULL LOAD TORQUE | 14.93 KG.M |
| 17. SITE ALTTITUDE(UNDER) | 1000 M |
| 18. ENCLOSURE & COOLING METHOD | T E N V |
| 19. TYPE OF BEARING | PL : 6307zz OPL : 6207zz |
| 20. MOUNTING | H O R I Z O N T A L |
| 21. MAXIMUM AMBIENT TEMPURE | 40 ℃ |
| 22. BEARING LUBRICATION | G R E A S E |
| 23. STARTING METHOD | F U L L V O L T A G E |

# LOAD LIMITER 권고 SETTING치

* POWER SOURCE : AC 3Φ 220V 60Hz

극동호이스트(주)

| HOIST | MOTOR 용량 | LOAD LIMITER 권고 SETTING치 | | | LOAD CURRENT | | C.T MODEL | 연결단자 NO | C.T 용량 | REMARK |
|---|---|---|---|---|---|---|---|---|---|---|
| | | LOAD CURRENT | ADJ START TIME | SHOCK TIME | 100% | 110% | | | | |
| 0.5 TON | 1.2KW x 8P | 110% | 1 SEC | 1 SEC | 8.0 A | 9.0 A | CT-1 | K, L | 5 V.A | |
| | 1.5KW x 6P | 110% | 1 SEC | 1 SEC | 7.6 A | 8.4 A | CT-1 | K, L | 5 V.A | |
| | 2.4KW x 4P | 110% | 1 SEC | 1 SEC | 10 A | 11.2 A | CT-1 | K, L | 5 V.A | |
| 1 TON | 1.2KW x 8P | 110% | 1 SEC | 1 SEC | 8.0 A | 9.0 A | CT-1 | K, L | 5 V.A | |
| | 1.5KW x 6P | 110% | 1 SEC | 1 SEC | 7.6 A | 8.4 A | CT-1 | K, L | 5 V.A | |
| | 2.4KW x 4P | 110% | 1 SEC | 1 SEC | 10 A | 11.2 A | CT-1 | K, L | 5 V.A | |
| 2 TON | 1.8KW x 8P | 110% | 1 SEC | 1 SEC | 11.0 A | 12.2 A | CT-1 | K, L | 5 V.A | |
| | 2.5KW x 6P | 110% | 1 SEC | 1 SEC | 12.0 A | 13.2 A | CT-1 | K, L | 5 V.A | |
| | 3.7KW x 4P | 110% | 1 SEC | 1 SEC | 16.0 A | 17.6 A | CT-1 | K, L | 5 V.A | |
| 2.8 TON | 2.5KW x 8P | 110% | 1 SEC | 1 SEC | 17.7 A | 19.5 A | CT-1 | K, L | 5 V.A | |
| | 5.0KW x 4P | 110% | 1 SEC | 1 SEC | 22.8 A | 25.0 A | CT-1 | K, L | 5 V.A | |
| 3 TON | 2.8KW x 8P | 110% | 1 SEC | 1 SEC | 17.7 A | 19.5 A | CT-1 | K, L | 5 V.A | |
| | 5.5KW x 4P | 110% | 1 SEC | 1 SEC | 22.8 A | 25.0 A | CT-1 | K, L | 5 V.A | |
| 5 TON | 4.2KW x 8P | 110% | 1 SEC | 1 SEC | 23.0 A | 25.3 A | CT-1 | K, L | 5 V.A | |
| | 5.5KW x 6P | 110% | 1 SEC | 1 SEC | 28.2 A | 31.0 A | CT-1 | K, L | 5 V.A | |
| | 8.5KW x 4P | 110% | 1 SEC | 1 SEC | 34.4 A | 38.4 A | CT-1 | K, L | 5 V.A | |
| 7.5 TON | 4.2KW x 8P | 110% | 1 SEC | 1 SEC | 23.0 A | 25.3 A | CT-1 | K, L | 5 V.A | |
| | 5.5KW x 6P | 110% | 1 SEC | 1 SEC | 28.2 A | 31.0 A | CT-1 | K, L | 5 V.A | |
| | 8.5KW x 4P | 110% | 1 SEC | 1 SEC | 34.4 A | 38.4 A | CT-1 | K, L | 5 V.A | |

NOTE

1. 상기 TABLE의 수치는 권고 SETTING 수치이며 MOTOR의 특성 및 현장 조건에 따라 변경 가능함.

불법복제 및 배포금지
불법복제 및 배포금지

# LOAD LIMITER 권고 SETTING치

* POWER SOURCE : AC 3¢ 380V 60Hz

극동호이스트(주)

| HOIST | MOTOR 용량 | LOAD LIMITER 권고 SETTING치 | | | LOAD CURRENT | | C.T MODEL | 연결단자 NO | C.T 용량 | REMARK |
|---|---|---|---|---|---|---|---|---|---|---|
| | | LOAD CURRENT | ADJ START TIME | SHOCK TIME | 100% | 110% | | | | |
| 0.5 TON | 1.2KW x 8P | 110% | 1 SEC | 1 SEC | 4.6 A | 5.2 A | CT-1 | K, L | 5 V.A | |
| | 1.5KW x 6P | 110% | 1 SEC | 1 SEC | 5.4 A | 4.9 A | CT-1 | K, L | 5 V.A | |
| | 2.4KW x 4P | 110% | 1 SEC | 1 SEC | 5.6 A | 6.4 A | CT-1 | K, L | 5 V.A | |
| 1 TON | 1.2KW x 8P | 110% | 1 SEC | 1 SEC | 4.6 A | 5.2 A | CT-1 | K, L | 5 V.A | |
| | 1.5KW x 6P | 110% | 1 SEC | 1 SEC | 5.4 A | 4.9 A | CT-1 | K, L | 5 V.A | |
| | 2.4KW x 4P | 110% | 1 SEC | 1 SEC | 5.6 A | 6.4 A | CT-1 | K, L | 5 V.A | |
| 2 TON | 1.8KW x 8P | 110% | 1 SEC | 1 SEC | 6.4 A | 7.1 A | CT-1 | K, L | 5 V.A | |
| | 2.5KW x 6P | 110% | 1 SEC | 1 SEC | 7.0 A | 7.7 A | CT-1 | K, L | 5 V.A | |
| | 3.7KW x 4P | 110% | 1 SEC | 1 SEC | 9.3 A | 10.3 A | CT-1 | K, L | 5 V.A | |
| 2.8 TON | 2.5KW x 8P | 110% | 1 SEC | 1 SEC | 10.3 A | 11.4 A | CT-1 | K, L | 5 V.A | |
| | 5.0KW x 4P | 110% | 1 SEC | 1 SEC | 12.2 A | 13.5 A | CT-1 | K, L | 5 V.A | |
| 3 TON | 2.8KW x 8P | 110% | 1 SEC | 1 SEC | 10.3 A | 11.4 A | CT-1 | K, L | 5 V.A | |
| | 5.5KW x 4P | 110% | 1 SEC | 1 SEC | 12.2 A | 13.5 A | CT-1 | K, L | 5 V.A | |
| 5 TON | 4.2KW x 8P | 110% | 1 SEC | 1 SEC | 13.3 A | 14.6 A | CT-1 | K, L | 5 V.A | |
| | 5.5KW x 6P | 110% | 1 SEC | 1 SEC | 19.9 A | 23.1 A | CT-1 | K, L | 5 V.A | |
| | 8.5KW x 4P | 110% | 1 SEC | 1 SEC | 16.3 A | 18.0 A | CT-1 | K, L | 5 V.A | |
| 7.5 TON | 4.2KW x 8P | 110% | 1 SEC | 1 SEC | 13.3 A | 14.6 A | CT-1 | K, L | 5 V.A | |
| | 5.5KW x 6P | 110% | 1 SEC | 1 SEC | 19.9 A | 23.1 A | CT-1 | K, L | 5 V.A | |
| | 8.5KW x 4P | 110% | 1 SEC | 1 SEC | 16.3 A | 18.0 A | CT-1 | K, L | 5 V.A | |

NOTE

1. 상기 TABLE의 수치는 권고 SETTING 수치이며 MOTOR의 특성 및 현장 조건에 따라 변경 가능함.

무단복제 및 배포금지
무단복제 및 배포금지

# LOAD LIMITER 권고 SETTING치

* POWER SOURCE : AC 3Φ 440V 60Hz

극동호이스트㈜

| HOIST | MOTOR 용량 | LOAD LIMITER 권고 SETTING치 | | | LOAD CURRENT | | C.T MODEL | 연결단자 NO | C.T 용량 | REMARK |
|---|---|---|---|---|---|---|---|---|---|---|
| | | LOAD CURRENT | ADJ START TIME | SHOCK TIME | 100% | 110% | | | | |
| 0.5 TON | 1.2KW x 8P | 110% | 1 SEC | 1 SEC | 4.0 A | 4.6 A | CT-1 | K, L | 5 V.A | |
| | 1.5KW x 6P | 110% | 1 SEC | 1 SEC | 3.8 A | 4.5 A | CT-1 | K, L | 5 V.A | |
| | 2.4KW x 4P | 110% | 1 SEC | 1 SEC | 5.0 A | 5.9 A | CT-1 | K, L | 5 V.A | |
| 1 TON | 1.2KW x 8P | 110% | 1 SEC | 1 SEC | 4.0 A | 4.6 A | CT-1 | K, L | 5 V.A | |
| | 1.5KW x 6P | 110% | 1 SEC | 1 SEC | 3.8 A | 4.5 A | CT-1 | K, L | 5 V.A | |
| | 2.4KW x 4P | 110% | 1 SEC | 1 SEC | 5.0 A | 5.9 A | CT-1 | K, L | 5 V.A | |
| 2 TON | 1.8KW x 8P | 110% | 1 SEC | 1 SEC | 5.5 A | 6.1 A | CT-1 | K, L | 5 V.A | |
| | 2.5KW x 6P | 110% | 1 SEC | 1 SEC | 5.8 A | 6.4 A | CT-1 | K, L | 5 V.A | |
| | 3.7KW x 4P | 110% | 1 SEC | 1 SEC | 8.0 A | 10.8 A | CT-1 | K, L | 5 V.A | |
| 2.8 TON | 2.5KW x 8P | 110% | 1 SEC | 1 SEC | 8.9 A | 9.8 A | CT-1 | K, L | 5 V.A | |
| | 5.0KW x 4P | 110% | 1 SEC | 1 SEC | 10.5 A | 11.6 A | CT-1 | K, L | 5 V.A | |
| 3 TON | 2.8KW x 8P | 110% | 1 SEC | 1 SEC | 8.9 A | 9.8 A | CT-1 | K, L | 5 V.A | |
| | 5.5KW x 4P | 110% | 1 SEC | 1 SEC | 10.5 A | 11.6 A | CT-1 | K, L | 5 V.A | |
| 5 TON | 4.2KW x 8P | 110% | 1 SEC | 1 SEC | 11.5 A | 12.7 A | CT-1 | K, L | 5 V.A | |
| | 5.5KW x 6P | 110% | 1 SEC | 1 SEC | 14.1 A | 15.5 A | CT-1 | K, L | 5 V.A | |
| | 8.5KW x 4P | 110% | 1 SEC | 1 SEC | 18.1A | 21.7A | CT-1 | K, L | 5 V.A | |
| 7.5 TON | 4.2KW x 8P | 110% | 1 SEC | 1 SEC | 11.5 A | 12.7 A | CT-1 | K, L | 5 V.A | |
| | 5.5KW x 6P | 110% | 1 SEC | 1 SEC | 14.1 A | 15.5 A | CT-1 | K, L | 5 V.A | |
| | 8.5KW x 4P | 110% | 1 SEC | 1 SEC | 16.5 A | 20.5 A | CT-1 | K, L | 5 V.A | |

NOTE

1. 상기 TABLE의 수치는 권고 SETTING 수치이며 MOTOR의 특성 및 현장 조건에 따라 변경 가능함.

불법복제 및 배포금지
무단복제 및 배포금지

# LOAD LIMITER 권고 SETTING치

* POWER SOURCE : AC 3¢ 460V 60Hz

극동호이스트(주)

| HOIST | MOTOR 용량 | LOAD LIMITER 권고 SETTING치 | | | LOAD CURRENT | | C.T MODEL | 연결단자 NO | C.T 용량 | REMARK |
|---|---|---|---|---|---|---|---|---|---|---|
| | | LOAD CURRENT | ADJ START TIME | SHOCK TIME | 100% | 110% | | | | |
| 0.5 TON | 1.2KW x 8P | 110% | 1 SEC | 1 SEC | 3.8 A | 4.4 A | CT-1 | K, L | 5 V.A | |
| | 1.5KW x 6P | 110% | 1 SEC | 1 SEC | 3.6 A | 4.1 A | CT-1 | K, L | 5 V.A | |
| | 2.4KW x 4P | 110% | 1 SEC | 1 SEC | 4.8 A | 5.2 A | CT-1 | K, L | 5 V.A | |
| 1 TON | 1.2KW x 8P | 110% | 1 SEC | 1 SEC | 3.8 A | 4.4 A | CT-1 | K, L | 5 V.A | |
| | 1.5KW x 6P | 110% | 1 SEC | 1 SEC | 3.6 A | 4.1 A | CT-1 | K, L | 5 V.A | |
| | 2.4KW x 4P | 110% | 1 SEC | 1 SEC | 4.8 A | 5.2 A | CT-1 | K, L | 5 V.A | |
| 2 TON | 1.8KW x 8P | 110% | 1 SEC | 1 SEC | 5.3 A | 5.9 A | CT-1 | K, L | 5 V.A | |
| | 2.5KW x 6P | 110% | 1 SEC | 1 SEC | 5.5 A | 6.1 A | CT-1 | K, L | 5 V.A | |
| | 3.7KW x 4P | 110% | 1 SEC | 1 SEC | 7.7 A | 8.5 A | CT-1 | K, L | 5 V.A | |
| 2.8T | 2.5KW x 8P | 110% | 1 SEC | 1 SEC | 7.7 A | 8.5 A | CT-1 | K, L | 5 V.A | |
| | 5.0KW x 4P | 110% | 1 SEC | 1 SEC | 10.0 A | 11.5 A | CT-1 | K, L | 5 V.A | |
| 3TON | 2.8KW x 8P | 110% | 1 SEC | 1 SEC | 7.7 A | 8.5 A | CT-1 | K, L | 5 V.A | |
| | 5.5KW x 4P | 110% | 1 SEC | 1 SEC | 10.0 A | 11.5 A | CT-1 | K, L | 5 V.A | |
| 5 TON | 4.2KW x 8P | 110% | 1 SEC | 1 SEC | 11.0 A | 12.2 A | CT-1 | K, L | 5 V.A | |
| | 5.5KW x 6P | 110% | 1 SEC | 1 SEC | 13.5 A | 14.7 A | CT-1 | K, L | 5 V.A | |
| | 8.5KW x 4P | 110% | 1 SEC | 1 SEC | 16.5 A | 20.5 A | CT-1 | K, L | 5 V.A | |
| 7.5 TON | 4.2KW x 8P | 110% | 1 SEC | 1 SEC | 11.0 A | 12.2 A | CT-1 | K, L | 5 V.A | |
| | 5.5KW x 6P | 110% | 1 SEC | 1 SEC | 13.5 A | 14.7 A | CT-1 | K, L | 5 V.A | |
| | 8.5KW x 4P | 110% | 1 SEC | 1 SEC | 16.5 A | 20.5 A | CT-1 | K, L | 5 V.A | |

NOTE

1. 상기 TABLE의 수치는 권고 SETTING 수치이며 MOTOR의 특성 및 현장 조건에 따라 변경 가능함.

본 문서는 제 품 배포금지
본 문서는 제 품 배포금지

# LOAD LIMITER 권고 SETTING치

* POWER SOURCE : AC 3Φ 480V 60Hz

극동호이스트(주)

| HOIST | MOTOR 용량 | LOAD LIMITER 권고 SETTING치 | | | LOAD CURRENT | | C.T MODEL | 연결단자 NO | C.T 용량 | REMARK |
|---|---|---|---|---|---|---|---|---|---|---|
| | | LOAD CURRENT | ADJ START TIME | SHOCK TIME | 100% | 110% | | | | |
| 0.5 TON | 1.2KW x 8P | 110% | 1 SEC | 1 SEC | 3.6 A | 4.2 A | CT-1 | K, L | 5 V.A | |
| | 1.5KW x 6P | 110% | 1 SEC | 1 SEC | 3.5 A | 3.9 A | CT-1 | K, L | 5 V.A | |
| | 2.4KW x 4P | 110% | 1 SEC | 1 SEC | 4.6 A | 5.1 A | CT-1 | K, L | 5 V.A | |
| 1 TON | 1.2KW x 8P | 110% | 1 SEC | 1 SEC | 3.6 A | 4.2 A | CT-1 | K, L | 5 V.A | |
| | 1.5KW x 6P | 110% | 1 SEC | 1 SEC | 3.5 A | 3.9 A | CT-1 | K, L | 5 V.A | |
| | 2.4KW x 4P | 110% | 1 SEC | 1 SEC | 4.6 A | 5.1 A | CT-1 | K, L | 5 V.A | |
| 2 TON | 1.8KW x 8P | 110% | 1 SEC | 1 SEC | 5.1 A | 5.8 A | CT-1 | K, L | 5 V.A | |
| | 2.5KW x 6P | 110% | 1 SEC | 1 SEC | 5.3 A | 6.0 A | CT-1 | K, L | 5 V.A | |
| | 3.7KW x 4P | 110% | 1 SEC | 1 SEC | 7.3 A | 8.2 A | CT-1 | K, L | 5 V.A | |
| 2.8 TON | 2.5KW x 8P | 110% | 1 SEC | 1 SEC | 7.3 A | 8.2 A | CT-1 | K, L | 5 V.A | |
| | 5.0KW x 4P | 110% | 1 SEC | 1 SEC | 9.6 A | 11.2 A | CT-1 | K, L | 5 V.A | |
| 3 TON | 2.8KW x 8P | 110% | 1 SEC | 1 SEC | 7.3 A | 8.2 A | CT-1 | K, L | 5 V.A | |
| | 5.5KW x 4P | 110% | 1 SEC | 1 SEC | 9.6 A | 11.2 A | CT-1 | K, L | 5 V.A | |
| 5 TON | 4.2KW x 8P | 110% | 1 SEC | 1 SEC | 10.5 A | 12.0 A | CT-1 | K, L | 5 V.A | |
| | 5.5KW x 6P | 110% | 1 SEC | 1 SEC | 12.9 A | 14.2 A | CT-1 | K, L | 5 V.A | |
| | 8.5KW x 4P | 110% | 1 SEC | 1 SEC | 15.8 A | 19.9 A | CT-1 | K, L | 5 V.A | |
| 7.5 TON | 4.2KW x 8P | 110% | 1 SEC | 1 SEC | 10.5 A | 12.0 A | CT-1 | K, L | 5 V.A | |
| | 5.5KW x 6P | 110% | 1 SEC | 1 SEC | 12.9 A | 14.2 A | CT-1 | K, L | 5 V.A | |
| | 8.5KW x 4P | 110% | 1 SEC | 1 SEC | 15.8 A | 19.9 A | CT-1 | K, L | 5 V.A | |

NOTE

1. 상기 TABLE의 수치는 권고 SETTING 수치이며 MOTOR의 특성 및 현장 조건에 따라 변경 가능함.

지정문서 배포 및 복제 금지
지정문서 배포 및 복제 금지

# E.O.C.R 권고 SETTING치

* POWER SOURCE : AC 3¢ 220V 60Hz

극동호이스트(주)

| HOIST | MOTOR 용량 | MOTOR 정격 전류 | DRIVE TYPE | E.O.C.R TYPE | 권고 SETTING 치 | | | REMARK |
|---|---|---|---|---|---|---|---|---|
| | | | | | DELAY TIME | OPERATION TIME | CURRENT | |
| 0.5 TON | 1.2KW x 8P | 8.0 A | 1 DRIVE | SS-30 | 3 SEC | 1 SEC | 8.0 A | |
| | 1.5KW x 6P | 7.6 A | 1 DRIVE | SS-30 | 3 SEC | 1 SEC | 7.6 A | |
| | 2.4KW x 4P | 10.0 A | 1 DRAVE | SS-30 | 3 SEC | 1 SEC | 10.0 A | |
| 1 TON | 1.2KW x 8P | 8.0 A | 1 DRIVE | SS-30 | 3 SEC | 1 SEC | 8.0 A | |
| | 1.5KW x 6P | 7.6 A | 1 DRIVE | SS-30 | 3 SEC | 1 SEC | 7.6 A | |
| | 2.4KW x 4P | 10.0 A | 1 DRAVE | SS-30 | 3 SEC | 1 SEC | 10.0 A | |
| 2 TON | 1.8KW x 8P | 11.0 A | 1 DRAVE | SS-30 | 3 SEC | 1 SEC | 11.0 A | |
| | 2.5KW x 6P | 12.0 A | 1 DRAVE | SS-30 | 3 SEC | 1 SEC | 12.0 A | |
| | 3.7KW x 4P | 16.0 A | 1 DRAVE | SS-30 | 3 SEC | 1 SEC | 16.0 A | |
| 2.8 TON | 2.5KW x 8P | 17.7 A | 1 DRAVE | SS-30 | 3 SEC | 1 SEC | 17.7 A | |
| | 5.0KW x 4P | 22.8 A | 1 DRAVE | SS-30 | 3 SEC | 1 SEC | 22.8 A | |
| 3 TON | 2.8KW x 8P | 17.7 A | 1 DRAVE | SS-30 | 3 SEC | 1 SEC | 17.7 A | |
| | 5.5KW x 4P | 22.8 A | 1 DRAVE | SS-30 | 3 SEC | 1 SEC | 22.8 A | |
| 5 TON | 4.2KW x 8P | 23.0 A | 1 DRAVE | SS-30 | 3 SEC | 1 SEC | 23.0 A | |
| | 5.5KW x 6P | 28.2 A | 1 DRAVE | SS-30 | 3 SEC | 1 SEC | 28.2 A | |
| | 8.5KW x 4P | 34.4 A | 1 DRAVE | SS-30 | 3 SEC | 1 SEC | 34.4 A | |
| 7.5 TON | 4.2KW x 8P | 23.0 A | 1 DRAVE | SS-30 | 3 SEC | 1 SEC | 23.0 A | |
| | 5.5KW x 6P | 28.2 A | 1 DRAVE | SS-30 | 3 SEC | 1 SEC | 28.2 A | |
| | 8.5KW x 4P | 34.4 A | 1 DRAVE | SS-30 | 3 SEC | 1 SEC | 34.4 A | |

NOTE

1. 상기 TABLE의 수치는 권고 SETTING 수치이며 MOTOR의 특성 및 현장 조건에 따라 변경 가능함.

불법복제 및 배포금지
불법복제 및 배포금지

# E.O.C.R 권고 SETTING치

* POWER SOURCE : AC 3¢ 380V 60Hz

극동호이스트(주)

| HOIST | MOTOR 용량 | 1 정격 전류 | DRIVE TYPE | E.O.C.R TYPE | 권고 SETTING 치 | | | REMARK |
|---|---|---|---|---|---|---|---|---|
| | | | | | DELAY TIME | OPERATION TIME | CURRENT | |
| 0.5 TON | 1.2KW x 8P | 4.6 A | 1 DRIVE | SS-30 | 3 SEC | 1 SEC | 4.6 A | |
| | 1.5KW x 6P | 5.4 A | 1 DRIVE | SS-30 | 3 SEC | 1 SEC | 5.4 A | |
| | 2.4KW x 4P | 5.6 A | 1 DRAVE | SS-30 | 3 SEC | 1 SEC | 5.6 A | |
| 1 TON | 1.2KW x 8P | 4.6 A | 1 DRIVE | SS-30 | 3 SEC | 1 SEC | 4.6 A | |
| | 1.5KW x 6P | 5.4 A | 1 DRIVE | SS-30 | 3 SEC | 1 SEC | 5.4 A | |
| | 2.4KW x 4P | 5.6 A | 1 DRAVE | SS-30 | 3 SEC | 1 SEC | 5.6 A | |
| 2 TON | 1.8KW x 8P | 6.4 A | 1 DRAVE | SS-30 | 3 SEC | 1 SEC | 6.4 A | |
| | 2.5KW x 6P | 7.0 A | 1 DRAVE | SS-30 | 3 SEC | 1 SEC | 7.0 A | |
| | 3.7KW x 4P | 9.3 A | 1 DRAVE | SS-30 | 3 SEC | 1 SEC | 9.3 A | |
| 2.8 TON | 2.5KW x 8P | 10.3 A | 1 DRAVE | SS-30 | 3 SEC | 1 SEC | 10.3 A | |
| | 5.0KW x 4P | 12.2 A | 1 DRAVE | SS-30 | 3 SEC | 1 SEC | 12.2 A | |
| 3 TON | 2.8KW x 8P | 10.3 A | 1 DRAVE | SS-30 | 3 SEC | 1 SEC | 10.3 A | |
| | 5.5KW x 4P | 12.2 A | 1 DRAVE | SS-30 | 3 SEC | 1 SEC | 12.2 A | |
| 5 TON | 4.2KW x 8P | 13.3 A | 1 DRAVE | SS-30 | 3 SEC | 1 SEC | 13.3 A | |
| | 5.5KW x 6P | 16.3 A | 1 DRAVE | SS-30 | 3 SEC | 1 SEC | 16.3 A | |
| | 8.5KW x 4P | 19.9 A | 1 DRAVE | SS-30 | 3 SEC | 1 SEC | 19.9 A | |
| 7.5 TON | 4.2KW x 8P | 13.3 A | 1 DRAVE | SS-30 | 3 SEC | 1 SEC | 13.3 A | |
| | 5.5KW x 6P | 16.3 A | 1 DRAVE | SS-30 | 3 SEC | 1 SEC | 16.3 A | |
| | 8.5KW x 4P | 19.9 A | 1 DRAVE | SS-30 | 3 SEC | 1 SEC | 19.9 A | |

NOTE

1. 상기 TABLE의 수치는 권고 SETTING 수치이며 MOTOR의 특성 및 현장 조건에 따라 변경 가능함.

불법복제 및 배포금지
불법복제 및 배포금지

# E.O.C.R 권고 SETTING치

* POWER SOURCE : AC 3¢ 440V 60Hz

극동호이스트(주)

| HOIST | MOTOR 용량 | MOTOR 정격 전류 | DRIVE TYPE | E.O.C.R TYPE | 권고 SETTING 치 | | | REMARK |
|---|---|---|---|---|---|---|---|---|
| | | | | | DELAY TIME | OPERATION TIME | CURRENT | |
| 0.5 TON | 1.2KW x 8P | 4.0 A | 1 DRIVE | SS-06 | 3 SEC | 1 SEC | 4.0 A | |
| | 1.5KW x 6P | 3.8 A | 1 DRIVE | SS-06 | 3 SEC | 1 SEC | 3.8 A | |
| | 2.4KW x 4P | 5.0 A | 1 DRAVE | SS-30 | 3 SEC | 1 SEC | 5.0 A | |
| 1 TON | 1.2KW x 8P | 4.0 A | 1 DRIVE | SS-06 | 3 SEC | 1 SEC | 4.0 A | |
| | 1.5KW x 6P | 3.8 A | 1 DRIVE | SS-06 | 3 SEC | 1 SEC | 3.8 A | |
| | 2.4KW x 4P | 5.0 A | 1 DRAVE | SS-30 | 3 SEC | 1 SEC | 5.0 A | |
| 2 TON | 1.8KW x 8P | 5.5 A | 1 DRAVE | SS-30 | 3 SEC | 1 SEC | 5.5 A | |
| | 2.5KW x 6P | 5.8 A | 1 DRAVE | SS-30 | 3 SEC | 1 SEC | 5.8 A | |
| | 3.7KW x 4P | 8.0 A | 1 DRAVE | SS-30 | 3 SEC | 1 SEC | 8.0 A | |
| 2.8 TON | 2.5KW x 8P | 8.9 A | 1 DRAVE | SS-30 | 3 SEC | 1 SEC | 8.9 A | |
| | 5.0KW x 4P | 10.5 A | 1 DRAVE | SS-30 | 3 SEC | 1 SEC | 10.5 A | |
| 3 TON | 2.8KW x 8P | 8.9 A | 1 DRAVE | SS-30 | 3 SEC | 1 SEC | 8.9 A | |
| | 5.5KW x 4P | 10.5 A | 1 DRAVE | SS-30 | 3 SEC | 1 SEC | 10.5 A | |
| 5 TON | 4.2KW x 8P | 11.5 A | 1 DRAVE | SS-30 | 3 SEC | 1 SEC | 11.5 A | |
| | 5.5KW x 6P | 14.1 A | 1 DRAVE | SS-30 | 3 SEC | 1 SEC | 14.1 A | |
| | 8.5KW x 4P | 18.1A | 1 DRAVE | SS-30 | 3 SEC | 1 SEC | 16.5 A | |
| 7.5 TON | 4.2KW x 8P | 11.5 A | 1 DRAVE | SS-30 | 3 SEC | 1 SEC | 11.5 A | |
| | 5.5KW x 6P | 14.1 A | 1 DRAVE | SS-30 | 3 SEC | 1 SEC | 14.1 A | |
| | 8.5KW x 4P | 16.5 A | 1 DRAVE | SS-30 | 3 SEC | 1 SEC | 16.5 A | |

NOTE

1. 상기 TABLE의 수치는 권고 SETTING 수치이며 MOTOR의 특성 및 현장 조건에 따라 변경 가능함.

본 문서는 제 품 배포금지
자료포배 및 제 품 복제 금지

# E.O.C.R 권고 SETTING치

* POWER SOURCE : AC 3¢ 460V 60Hz

극동호이스트(주)

| HOIST | MOTOR 용량 | MOTOR 정격 전류 | DRIVE TYPE | E.O.C.R TYPE | 권고 SETTING 치 | | | REMARK |
|---|---|---|---|---|---|---|---|---|
| | | | | | DELAY TIME | OPERATION TIME | CURRENT | |
| 0.5 TON | 1.2KW x 8P | 3.8 A | 1 DRIVE | SS-06 | 3 SEC | 1 SEC | 3.8 A | |
| | 1.5KW x 6P | 3.6 A | 1 DRIVE | SS-06 | 3 SEC | 1 SEC | 3.6 A | |
| | 2.4KW x 4P | 4.8 A | 1 DRAVE | SS-06 | 3 SEC | 1 SEC | 4.8 A | |
| 1 TON | 1.8KW x 8P | 5.3 A | 1 DRAVE | SS-30 | 3 SEC | 1 SEC | 5.3 A | |
| | 2.5KW x 6P | 5.5 A | 1 DRAVE | SS-30 | 3 SEC | 1 SEC | 5.8 A | |
| | 3.7KW x 4P | 7.7 A | 1 DRAVE | SS-30 | 3 SEC | 1 SEC | 7.7 A | |
| 2 TON | 1.8KW x 8P | 5.3 A | 1 DRAVE | SS-30 | 3 SEC | 1 SEC | 5.3 A | |
| | 2.5KW x 6P | 5.5 A | 1 DRAVE | SS-30 | 3 SEC | 1 SEC | 5.8 A | |
| | 3.7KW x 4P | 7.7 A | 1 DRAVE | SS-30 | 3 SEC | 1 SEC | 7.7 A | |
| 2.8 TON | 2.5KW x 8P | 7.7 A | 1 DRAVE | SS-30 | 3 SEC | 1 SEC | 7.7 A | |
| | 5.0KW x 4P | 10.0 A | 1 DRAVE | SS-30 | 3 SEC | 1 SEC | 10.0 A | |
| 3 TON | 2.8KW x 8P | 7.7 A | 1 DRAVE | SS-30 | 3 SEC | 1 SEC | 7.7 A | |
| | 5.5KW x 4P | 10.0 A | 1 DRAVE | SS-30 | 3 SEC | 1 SEC | 10.0 A | |
| 5 TON | 4.2KW x 8P | 11.0 A | 1 DRAVE | SS-30 | 3 SEC | 1 SEC | 11.0 A | |
| | 5.5KW x 6P | 13.5 A | 1 DRAVE | SS-30 | 3 SEC | 1 SEC | 13.5 A | |
| | 8.5KW x 4P | 16.5 A | 1 DRAVE | SS-30 | 3 SEC | 1 SEC | 16.5 A | |
| 7.5 TON | 4.2KW x 8P | 11.0 A | 1 DRAVE | SS-30 | 3 SEC | 1 SEC | 11.0 A | |
| | 5.5KW x 6P | 13.5 A | 1 DRAVE | SS-30 | 3 SEC | 1 SEC | 13.5 A | |
| | 8.5KW x 4P | 16.5 A | 1 DRAVE | SS-30 | 3 SEC | 1 SEC | 16.5 A | |

NOTE

1. 상기 TABLE의 수치는 권고 SETTING 수치이며 MOTOR의 특성 및 현장 조건에 따라 변경 가능함.

본 문서는 제 3 자에 배포금지
이 문서는 배포 및 복제 금지

# E.O.C.R 권고 SETTING치

* POWER SOURCE : AC 3¢ 480V 60Hz

극동호이스트(주)

| HOIST | MOTOR 용량 | MOTOR 정격 전류 | DRIVE TYPE | E.O.C.R TYPE | 권고 SETTING 치 | | | REMARK |
|---|---|---|---|---|---|---|---|---|
| | | | | | DELAY TIME | OPERATION TIME | CURRENT | |
| 0.5 TON | 1.2KW x 8P | 3.6 A | 1 DRIVE | SS-06 | 3 SEC | 1 SEC | 3.6 A | |
| | 1.5KW x 6P | 3.5 A | 1 DRIVE | SS-06 | 3 SEC | 1 SEC | 3.5 A | |
| | 2.4KW x 4P | 4.6 A | 1 DRAVE | SS-06 | 3 SEC | 1 SEC | 4.6 A | |
| 1 TON | 1.2KW x 8P | 3.6 A | 1 DRIVE | SS-06 | 3 SEC | 1 SEC | 3.6 A | |
| | 1.5KW x 6P | 3.5 A | 1 DRIVE | SS-06 | 3 SEC | 1 SEC | 3.5 A | |
| | 2.4KW x 4P | 4.6 A | 1 DRAVE | SS-06 | 3 SEC | 1 SEC | 4.6 A | |
| 2 TON | 1.8KW x 8P | 5.1 A | 1 DRAVE | SS-30 | 3 SEC | 1 SEC | 5.1 A | |
| | 2.5KW x 6P | 5.3 A | 1 DRAVE | SS-30 | 3 SEC | 1 SEC | 5.3 A | |
| | 3.7KW x 4P | 7.3 A | 1 DRAVE | SS-30 | 3 SEC | 1 SEC | 7.3 A | |
| 2.8 TON | 2.5KW x 8P | 7.3 A | 1 DRAVE | SS-30 | 3 SEC | 1 SEC | 7.3 A | |
| | 5.0KW x 4P | 9.6 A | 1 DRAVE | SS-30 | 3 SEC | 1 SEC | 9.6 A | |
| 3 TON | 2.8KW x 8P | 7.3 A | 1 DRAVE | SS-30 | 3 SEC | 1 SEC | 7.3 A | |
| | 5.5KW x 4P | 9.6 A | 1 DRAVE | SS-30 | 3 SEC | 1 SEC | 9.6 A | |
| 5 TON | 4.2KW x 8P | 10.5 A | 1 DRAVE | SS-30 | 3 SEC | 1 SEC | 10.5 A | |
| | 5.5KW x 6P | 12.9 A | 1 DRAVE | SS-30 | 3 SEC | 1 SEC | 12.9 A | |
| | 8.5KW x 4P | 15.8 A | 1 DRAVE | SS-30 | 3 SEC | 1 SEC | 15.8 A | |
| 7.5 TON | 4.2KW x 8P | 10.5 A | 1 DRAVE | SS-30 | 3 SEC | 1 SEC | 10.5 A | |
| | 5.5KW x 6P | 12.9 A | 1 DRAVE | SS-30 | 3 SEC | 1 SEC | 12.9 A | |
| | 8.5KW x 4P | 15.8 A | 1 DRAVE | SS-30 | 3 SEC | 1 SEC | 15.8 A | |

NOTE

1. 상기 TABLE의 수치는 권고 SETTING 수치이며 MOTOR의 특성 및 현장 조건에 따라 변경 가능함.

무단복제 및 배포금지
무단복제 및 배포금지

불법복제 및 배포금지
불법복제 및 배포금지

# SUB VENDOR LIST

| 구분 | NO | DESCRIPTION | SUB VENDOR | TEL NO. | REMARK |
|---|---|---|---|---|---|
| 기계 | 1 | WIRE ROPE | 만호 로우프(주) | 051-332-3131 | |
| | | | 고려제강 (주) | 02-776-4131 | |
| | 2 | MAGNET CORE | 극동호이스트(주) | 031-491-5311 | |
| | 3 | DRUM | 극동호이스트(주) | 031-491-5311 | |
| | 4 | GEAR | 극동호이스트(주) | 031-491-5311 | |
| | 5 | HOOK ASS'Y | 제 일 단 철 | 032-527-2817 | |
| | | | 대 흥 단 조 | 032-561-0541 | |
| | 6 | MIDDLE SHAFT | 극동호이스트(주) | 031-491-5311 | |
| | 7 | RAIL CHANNEL ANGLE | 인천제철(주) | 032-763-5000 | |
| | | | 강원산업(주) | 032-756-8881 | |
| 전기 | 8 | MAG CONTACTOR | L.G 전선 (주) | 02-273-4140 | 전 품 |
| | | | (주) 대 륙 | 02-242-4141 | 한국공업협회 |
| | | | (주) 대성디에스 | 055-338-3125 | |
| | 9 | E.O.C.R | 삼화기연 (주) | 032-62-1331 | K.S |
| | | | 아산 전기 | 02-2636-8035 | |
| | 10 | PUSH BUTTON | 한영전기 (주 | 02-742-0430 | 전 품 |
| | | | (주)케이지오토 | 02-247-3131 | 전 품 |
| | | | 반도기계 (주) | 031-495-8353-4 | 전 품 |
| | 11 | LOAD LIMITER | 보 창 기 전 | 032-431-0150 | 산 안 검 |
| | | | 반도기계 (주) | 031-495-8353-4 | 산 안 검 |
| | | | 정호 엔지니어링 | 02-681-0553 | 산 안 검 |
| | 12 | SILICON | 반도기계 (주) | 031-495-8353-4 | |
| | | | 아산 전기 | 02-2636-8035 | |
| | | | 보 창 기 전 | 032-431-0150 | |

불법복제 및 배포금지
불법복제 및 배포금지

KISWIRE

ISSUE NO. PW1416 DATE 2014-01-29

# MILL TEST CERTIFICATE

THIS IS TO CERTIFY THAT THE MATERIAL DESCRIBED BELOW WAS MANUFACTURED IN ACCORDANCE WITH KISWIRE LTD SPECIFICATION AND APPLICABLE SECTIONS

OF **KSD 3514 - 2002** **( B Grade )**

TO MESSRS KISWIRE LTD.

MATERIAL DESCRIPTION UNGALVANIZED STEEL WIRE ROPE

06X37 + FC 2000M X 3 REEL

EX NO. PW1416 T/T NO.

ORDER NO. REEL NO. 2 ~ 4 SAMPLING NO. 2

DIAMETER OF ROPE 16.0 mm TYPE OF CORE Fiber Core

SPECIFIED BREAKING LOAD 145.0 kN SAMPLE BROKE AT 157.575 kN

WT. OF ZINC COATING OF OUTER WIRE MIN. g/m² MAX. g/m²

ROPE LAY RHRL (OZ) LAY LENGTH 106.4 mm

LUBRICATION A-2

CHEMICAL ANALYSIS OF WIRE ROD

| CHARGE NO. | C X 100 | Si X 100 | Mn X 100 | P X 1000 | S X 1000 |
|---|---|---|---|---|---|
| **SD51275791** | **61** | **20** | **55** | **7** | **13** |

KS JIS

DATE OF SAMPLE TEST 2014-01-29

KISWIRE

불법복제 및 배포금지
불법복제 및 배포금지



| EN 60 947-5-1 | | | |
|---|---|---|---|
| Clause | Requirement – Test | Result - Remark | Verdict |

| | | |
|---|---|---|
| | **Annex C of IEC 60947-1** | P |
| | | |

| | | | |
|---|---|---|---|
| Annex C | **Degree of protection of enclosed control circuit-devices** | | P |
| C.1 | **Scope** | | |
| | This annex applies to degrees of protection of enclosed switchgear and control gear at rated voltages not exceeding 1000 V a.c. or 1500 V d.c. hereafter referred as "equipment" | | |
| C.2 | **Object** | | |
| | Clause 2 of IEC 60529 applies with additional requirements of this annex | | |
| C.3 | **Definitions** | | |
| | Clause 3 of IEC 60529 applies except that "Enclosure" is replaced by the following: | | |
| | "A part providing a specified degree of protection of equipment against certain external influences and a specified degree of protection against approach to or contact with live parts and moving parts" | | |
| C.4 | **Designation** | | |
| | Clause 4 of IEC 60529 applies except for letters H, M and S | | N/A |
| C.5 | **Degrees of protection against access to hazardous parts and against ingress of solid foreign objects indicated by the first characteristic numeral** | | |
| | Clause 5 of IEC 60529 applies | 6 | P |
| C.6 | **Degrees of protection against ingress of water indicated by the second characteristic numeral** | | |
| | Clause 6 of IEC 60529 applies | 5 | P |
| C.7 | **Degrees of protection against access to hazardous parts indicated by the additional letter** | | N/A |
| | Clause7 of IEC 60529 applies | | N/A |
| C.8 | **Supplementary letters** | | N/A |
| | Clause 8 of IEC 60529 applies | | N/A |
| C.9 | **Examples of designations with IP Code** | | P |
| | Clause 9 of IEC 60529 applies | | P |
| C.10 | **Marking** | | P |



C.5, C.6항이 IP65 PASS를 뜻함.

불법복제 및 배포금지

KISWIRE

ISSUE NO. PW1416 DATE 2014-01-29

# MILL TEST CERTIFICATE

THIS IS TO CERTIFY THAT THE MATERIAL DESCRIBED BELOW WAS MANUFACTURED IN ACCORDANCE WITH KISWIRE LTD SPECIFICATION AND APPLICABLE SECTIONS

OF **KSD 3514 - 2002** **( B Grade )**

TO MESSRS KISWIRE LTD.

MATERIAL DESCRIPTION UNGALVANIZED STEEL WIRE ROPE

06X37 + FC 2000M X 3 REEL

EX NO. PW1416 T/T NO.

ORDER NO. REEL NO. 2 ~ 4 SAMPLING NO. 2

DIAMETER OF ROPE 16.0 mm TYPE OF CORE Fiber Core

SPECIFIED BREAKING LOAD 145.0 kN SAMPLE BROKE AT 157.575 kN

WT. OF ZINC COATING OF OUTER WIRE MIN. g/m² MAX. g/m²

ROPE LAY RHRL (OZ) LAY LENGTH 106.4 mm

LUBRICATION A-2

CHEMICAL ANALYSIS OF WIRE ROD

| CHARGE NO. | C X 100 | Si X 100 | Mn X 100 | P X 1000 | S X 1000 |
|---|---|---|---|---|---|
| **SD51275791** | **61** | **20** | **55** | **7** | **13** |

KS JIS

DATE OF SAMPLE TEST 2014-01-29

KISWIRE

불법복제 및 배포금지



| EN 60 947-5-1 | | | |
|---|---|---|---|
| Clause | Requirement – Test | Result - Remark | Verdict |

| | | |
|---|---|---|
| | **Annex C of IEC 60947-1** | P |
| | | |

| | | | |
|---|---|---|---|
| **Annex C** | **Degree of protection of enclosed control circuit-devices** | | P |
| **C.1** | **Scope** | | |
| | This annex applies to degrees of protection of enclosed switchgear and control gear at rated voltages not exceeding 1000 V a.c. or 1500 V d.c. hereafter referred as "equipment" | | |
| **C.2** | **Object** | | |
| | Clause 2 of IEC 60529 applies with additional requirements of this annex | | |
| **C.3** | **Definitions** | | |
| | Clause 3 of IEC 60529 applies except that "Enclosure" is replaced by the following: | | |
| | "A part providing a specified degree of protection of equipment against certain external influences and a specified degree of protection against approach to or contact with live parts and moving parts" | | |
| **C.4** | **Designation** | | |
| | Clause 4 of IEC 60529 applies except for letters H, M and S | | N/A |
| **C.5** | **Degrees of protection against access to hazardous parts and against ingress of solid foreign objects indicated by the first characteristic numeral** | | |
| | Clause 5 of IEC 60529 applies | 6 | P |
| **C.6** | **Degrees of protection against ingress of water indicated by the second characteristic numeral** | | |
| | Clause 6 of IEC 60529 applies | 5 | P |
| **C.7** | **Degrees of protection against access to hazardous parts indicated by the additional letter** | | N/A |
| | Clause7 of IEC 60529 applies | | N/A |
| **C.8** | **Supplementary letters** | | N/A |
| | Clause 8 of IEC 60529 applies | | N/A |
| **C.9** | **Examples of designations with IP Code** | | P |
| | Clause 9 of IEC 60529 applies | | P |
| **C.10** | **Marking** | | P |

TRF-No.: IEC60947_5_1A

C.5, C.6항이 IP65 PASS를 뜻함.